UNDERGROUND RAINWATER MANAGEMENT SYSTEMS
Garden Eco
Garden Complex
House Complex
by Kingspan Environmental

Assembly and operation manual

(Version 2/2009)

This operation and installation manual contains important notes and warnings on installation of the tank component/accessories. The operating manual and the installation manual shall be observed and followed. The manual is ancillary and does not constitute a source of law. Compliance with instructions does not exempt from the application of local laws, in particular in the field of health and safety, fire protection, environmental protection and construction law.
The manufacturer is not liable for damages and losses resulting from incorrect operation of the machine. The user must verify if the manual provisions are sufficient for meeting the abiding legal regulations.

Technical changes reserved: May 2010

TABLE OF CONTENT

I. GENERAL INFORMATION

You have purchased a high class product. Congratulations on your choice. The product after manufacturing and quality control, in faultless condition was transported to the recipient. Prior to its assembly, the purchaser is obliged to check purchased products in order to detect any defects and check completeness of the supply. Any claims must be reported prior to assembly commencement!
During assembly you must observe all instructions of the manual.
Non adherence to assembly and operation manual forfeits any guaranty rights. In case of lack of the manual, we ask you to have it ordered.
Elements in sets can have additional separate manuals attached to packaging. System assembly must be realized by a specialist company.

1.1 SAFETY

During all installation and maintenance works observe all labour safety measures in accordance with currently abiding regulations and standards.
The hereby manual includes all information on standards and regulations which must be applied and observed. In particular, it refers to installation and maintenance works inside excavation or a tank when another accompanying person is necessary.
Works connected with transportation, loading, unloading, positioning in excavation during installation must be realized by authorized and duly trained persons and with appropriate equipment.
For all works connected with the installation or part of the installation provide permanent disconnection from sewage and electric system for the duration of works.
Kingspan Environmental offers vast assortment of system accessories which are compatible with the installation. The use of other components may result in reduction of the installation efficiency and in loss of guarantee rights.

All ducts and water intake points from installation must be marked with words "**Non drinkable water**" or with other mark in order it is not used for food purposes. Tanks and garden boxes access lids must be locked and protected against access of children.

System power supply installation must be constructed in accordance with producer's recommendations and abiding regulations. It must be kept in good technical condition. In case any system failure is detected, until its removal, the device must be disconnected from power supply. Lack of observance of the aforementioned recommendations can result in electric shock leading to death or permanent injury.

1.2 TRANSPORTATION AND STORAGE

Due to their overall dimensions and weights, the system elements, tanks in particular, require special means of transportation and storage:

1. Elements must be stored in open space, not covered with any sharp objects. Storage must provide protection against damage due to atmospheric conditions or resulting from third persons operation. Any handling in the warehouse must be realized solely by lifting. It is forbidden to push or roll the devices on the site. Tanks must always be stored and transported in vertical position.

2. Transportation of tanks can be made solely by specialist vehicles. The vehicle loading space should be at least of 3m high and of width appropriate for a given tank diameter. It is very useful to have vehicles equipped with lowered platform.
   During transportation the system elements must be protected against relocation. Use only transport slings for fixing. Fixing with steel ropes and chains is forbidden. Upon fixing tanks with slings be careful not to make any damages. Do not use protruding elements such as connections for fixing.

3. The system is delivered to the address of supply by truck vehicle and the recipient is responsible for its correct unloading.
   Be careful during loading and unloading in particular at temperatures below -5°C, due to increased ris k of mechanical damage to the tank.
   At the moment of the vehicle arrival provide appropriate unloading equipment and a number of persons. Do not drop or manually lower the tank e.g. with beams and slings. If the vehicle is not equipped with lowering platform use fork lift of minimum load bearing capacity of 1.2t and fork length at least 1.2m.
   You can also use crane of minimum load bearing capacity of 0.5t and at least 1mlength, equipped with lugs, hooks and shackles.

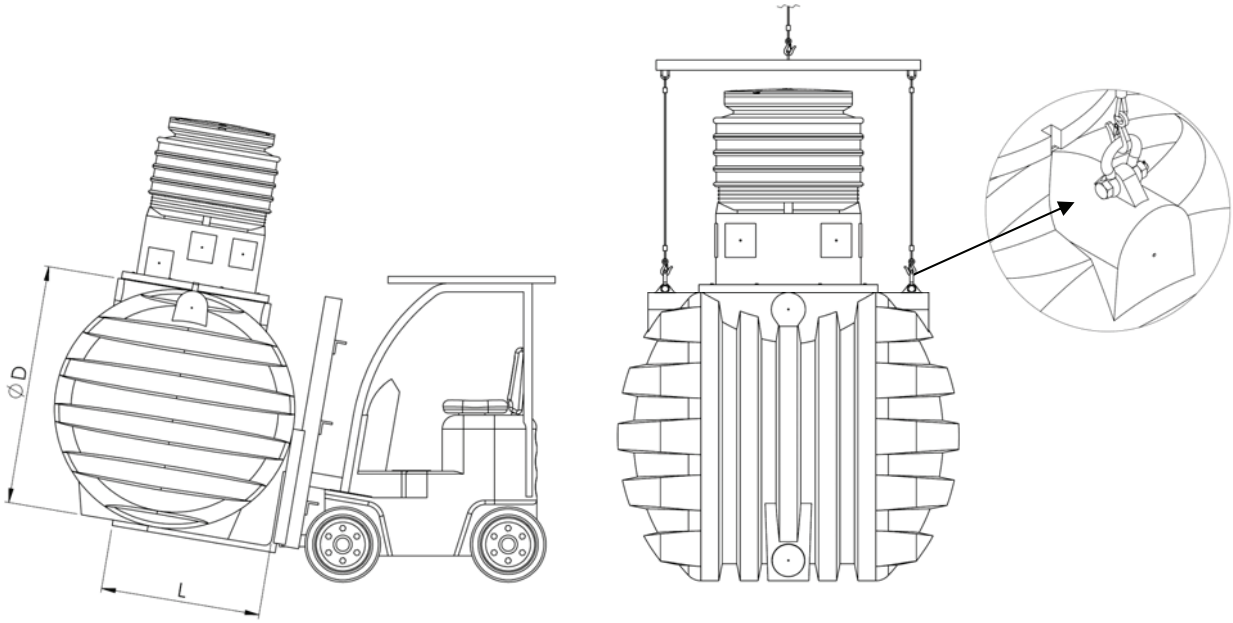

Various types of equipment for unloading and close transportation of tanks.

NOTE!
Works connected with transportation, loading and unloading can be realized solely by trained and properly authorized persons. The equipment used must be in technical working order and must have valid permits.

II. CONSTRUCTION AND OPERATION

Rainwater collection helps to solve the problem of its discharging on one hand, on the other it allows for saving drinking water in households. Rainwater can replace drinking water in locations of its highest consumption.
Kingspan Environmental offers several types of rainwater management systems which allow for meeting various requirements of the customers. On the following pages we present description of construction and operation of such individual systems.

2.1 GARDEN ECO I AND ECO II SYSTEMS

Garden Eco systems are used for collecting, storage and subsequent use of rainwater for loan watering spring-autumn season. Besides, the water collected in other tank can be used for other purposes such as car washing, cleaning works at our yard etc.
Rainwater running via gutter system from a roof down via vertical discharge system is fed by underground pipes to the underground tank.
Then on the filter installed in the tank riser pipe (Garden Eco I and Garden Complex I system) or in ground filter installed in front of the tank (Garden Eco II and Garden Complex I system) its mechanical purification of pollutants takes place and clear water runs to the tank.
Depending on their version, the systems are equipped with collecting filters when surplus water receiver is the drainage area or flow filters when the receiver is rainwater sewage system.
Pumps used in Eco and Complex systems are equipped with pressure automation which controls pump activation and deactivation in order to maintain set pressure on at the pump pressing side. Pump outlet can be connected to a garden box located at a certain distance from the tank. The box is equipped with ball valve and quick-fitting for garden hose connection. Construction schemes for individual versions of Eco systems are presented on the following drawings.

Garden Eco I system with collecting filter

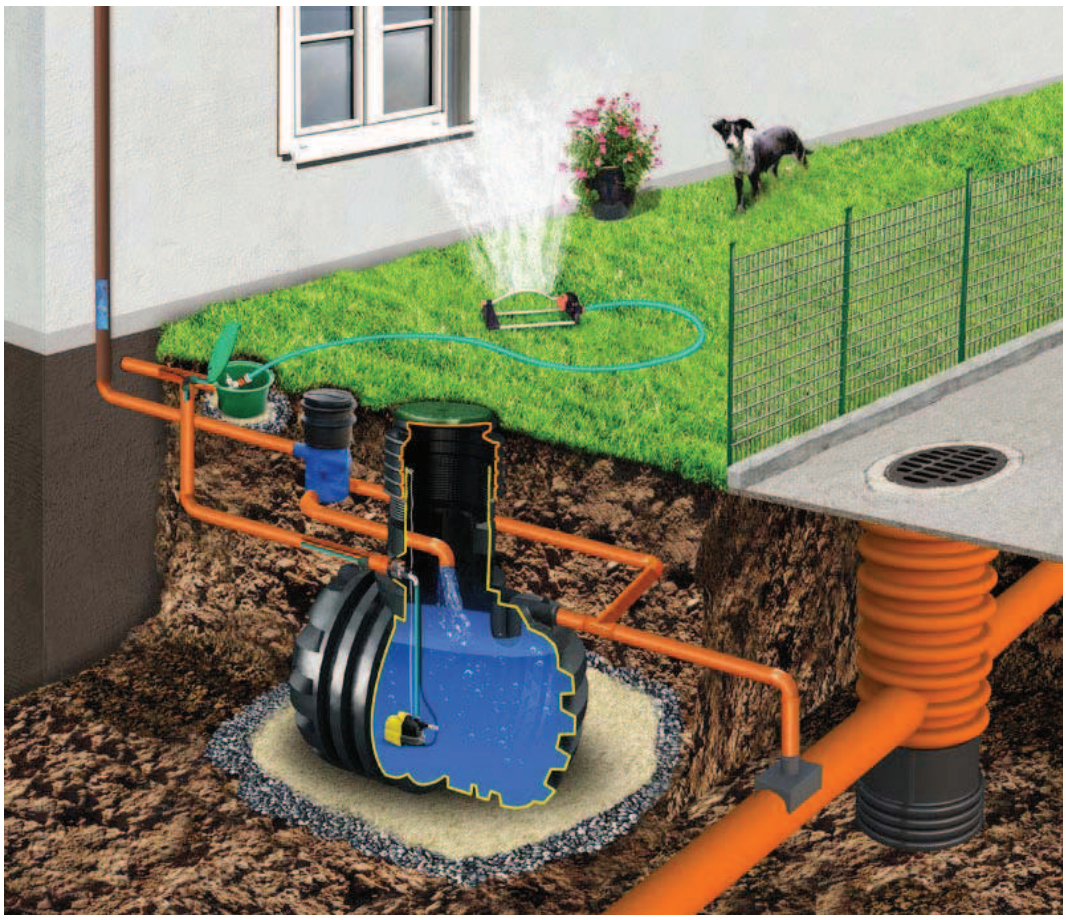

Garden Eco II system with ground flow filter

Equipment of riser pipes of Garden Eco systems tanks.

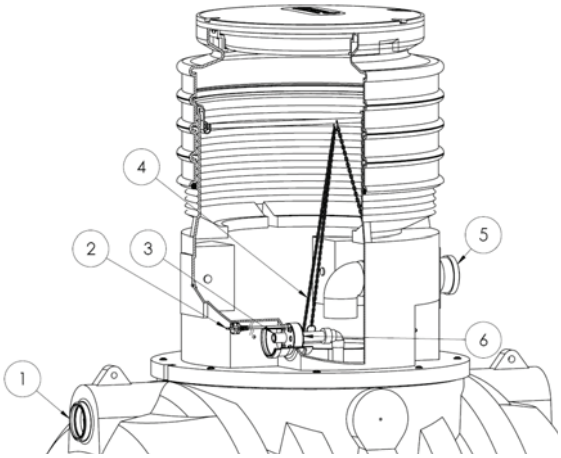

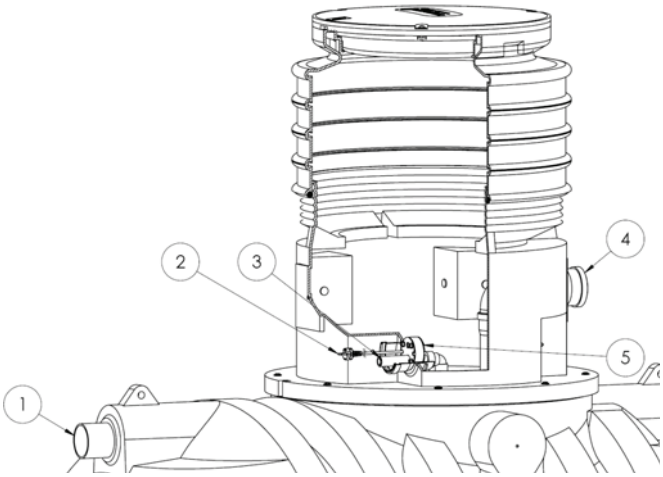

Garden Eco I with collecting filter

Key:
1 – overflow connection (faucet Ø 110mm)
2 – pump supply cable
3 – pump pressing line connection Ø 32mm
4 - collecting filter
5 – inlet connection (faucet Ø 110mm)
6 – protection pipe connection (faucet Ø 110mm)

Garden Eco II with ground collecting filter

Key:
1 – overflow connection (Ø 110mm)
2 - pump supply cable
3 - pump pressing line connection Ø 32mm
4 - overflow connection (faucet Ø 110mm)
5 - protection pipe connection (faucet Ø 110mm)

2.2 GARDEN COMPLEX I AND COMPLEX II SYSTEMS

Garden Complex systems are used for collecting, storage and subsequent use of rainwater for loan watering spring-autumn season. Besides, the water collected in other tank can be used for other purposes such as car washing, cleaning works at our yard etc.
Rainwater running via gutter system from a roof down via vertical discharge system is fed by underground pipes to the underground tank.
Then on the filter installed in the tank riser pipe (Garden Complex I system) or in ground filter installed in front of the tank (Garden Complex II system) its mechanical purification of pollutants takes place and clear water runs to the tank.
Pumps used in Complex systems are equipped with pressure automation which controls pump activation and deactivation in order to maintain set pressure on at the pump pressing side. Pump outlet can be connected to a garden box located at a certain distance from the tank. The box is equipped with ball valve and quick-fitting for garden hose connection. Construction schemes for individual versions of Garden systems are presented on the following drawings.

Garden Complex I with collecting filter

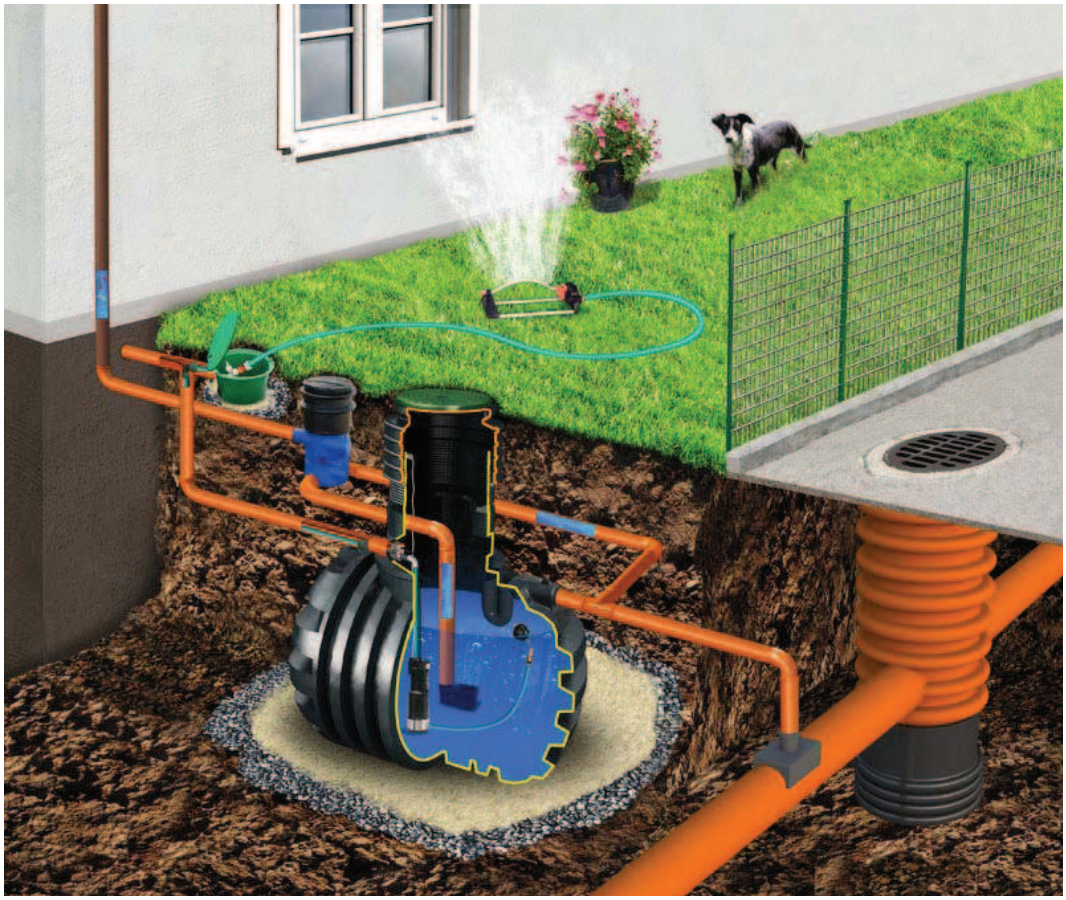

Garden Complex II with ground flow filter

2.3 HOUSE COMPLEX I AND COMPLEX II SYSTEM

House and garden House Complex system is used for storage and subsequent use of rainwater inside and outside buildings for household purposes such as: toilet flushing, cleaning and loan watering etc. The system can be used all year round.
The system consists of a complete tank with a lid, filter, water intake and overflow and control box located in the technical room of the building equipped with a pump and necessary accessories for water intake from the tank and water feeding to independent water system (toilet, washing machine, cleaning, watering). In case of periodical lack of rainwater in the tank the installation is automatically filled up with water system water.
Remember that in case of such a system it is necessary to design and construct separate water system installation which uses rainwater so the decision on installation of house and garden system should best be made as soon as the building object design stage.
Complex I systems are equipped with integrated filters inside the tank and in Complex II systems, ground filters are installed outside the tank. The filters can be of a collecting or flow type.

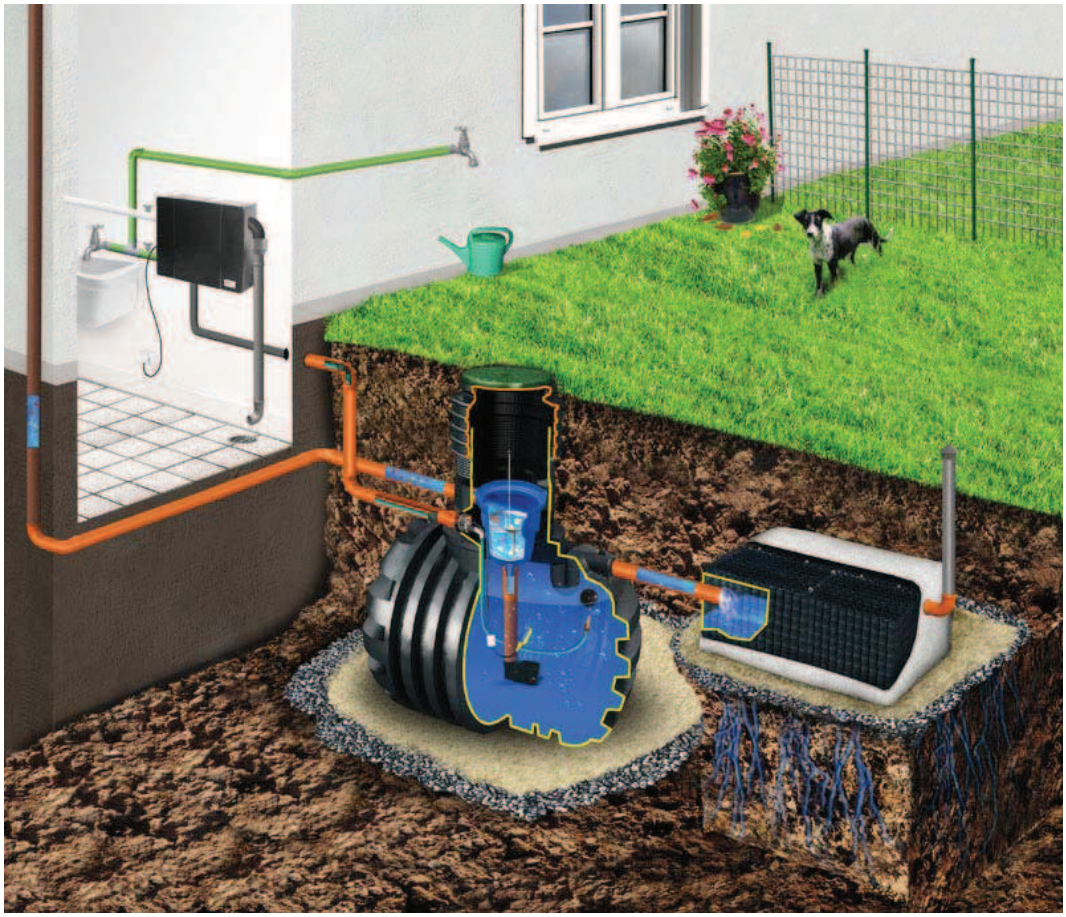

House Complex I - system with collecting filter

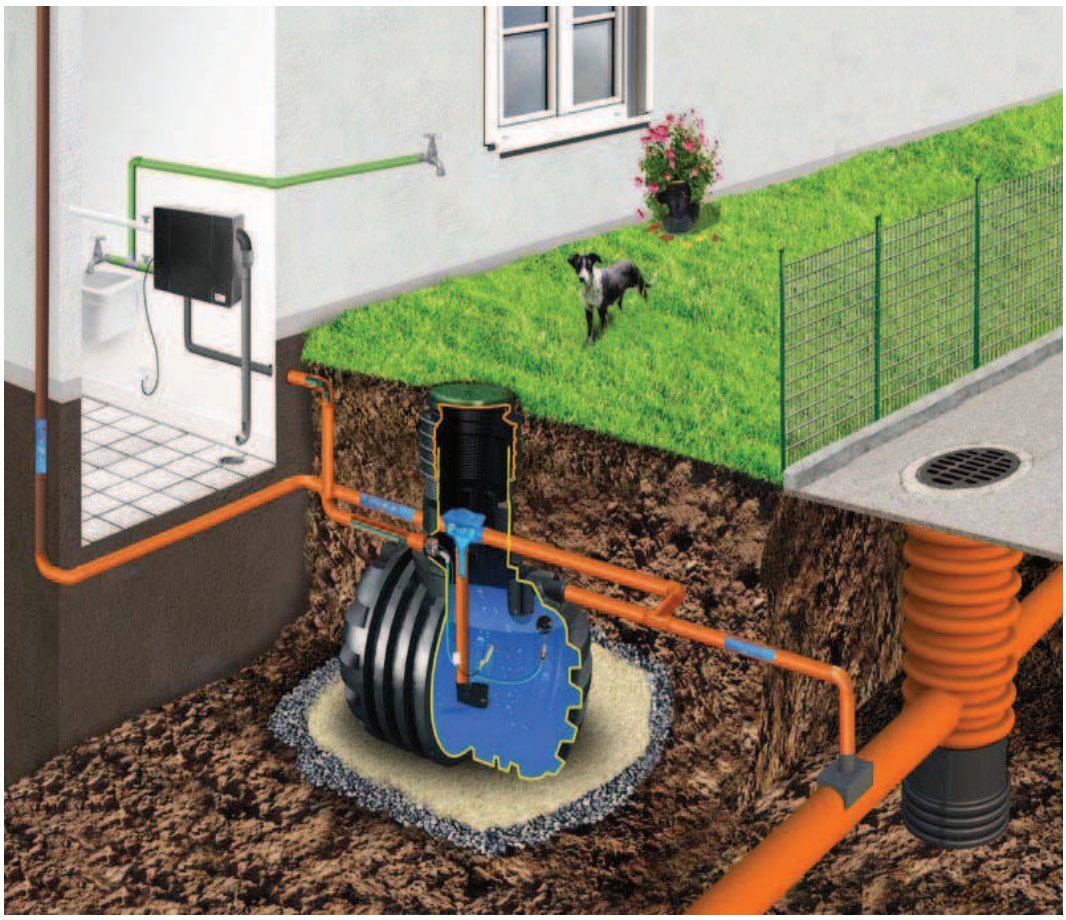

House Complex I - system with flow filter

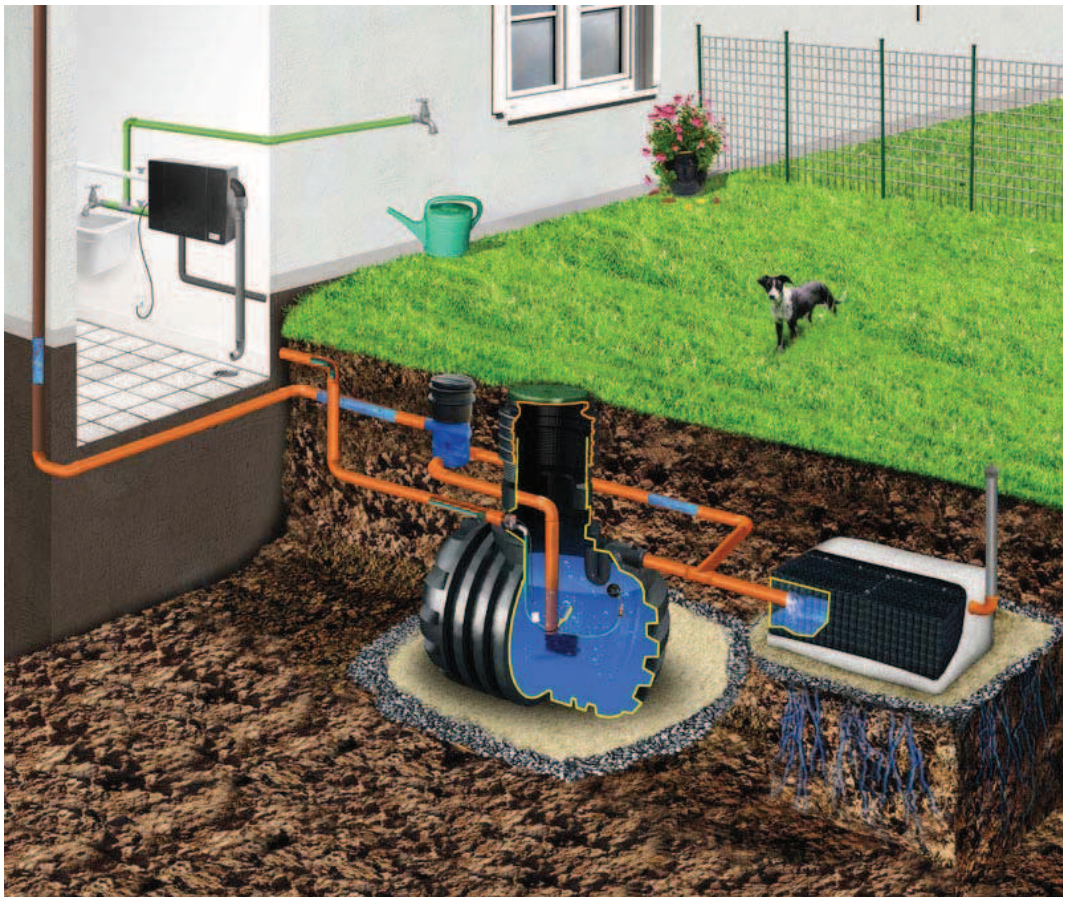

House Complex II - systems with collecting ground filter

2.4 TANKS

Underground tanks are the basic element of the systems. TitanAqua offer includes a type and series of tanks of operating capacities 3000, 4500 and 6000 litres. In case the tanks are connected in batteries capacities of.
9000, 12000, 18000 and 24000 litres and bigger can be obtained which allows for selection of optimum capacity for the requirements of a given location. The tanks are characterised with robust, ribbed construction which makes them ideal for installation in the ground even at unfavourable soil and water conditions e.g. high groundwater levels or necessity of deeper foundation.
In case deeper than standard foundation is required for tanks, each time it is necessary to perform static and resistance calculations for tanks. The tanks are made of high quality polyethylene, in standard black colour, so their weight is considerably lower than that of concrete tanks and it makes their assembly easier. The tanks are characterised with long-term lifetime.
The tanks consist of a tank shaft, riser pipe permanently fixed to the tank shaft and swift pipe which, depending on the tank foundation depth, allows for adjustment of a lid position to the surrounding ground level.

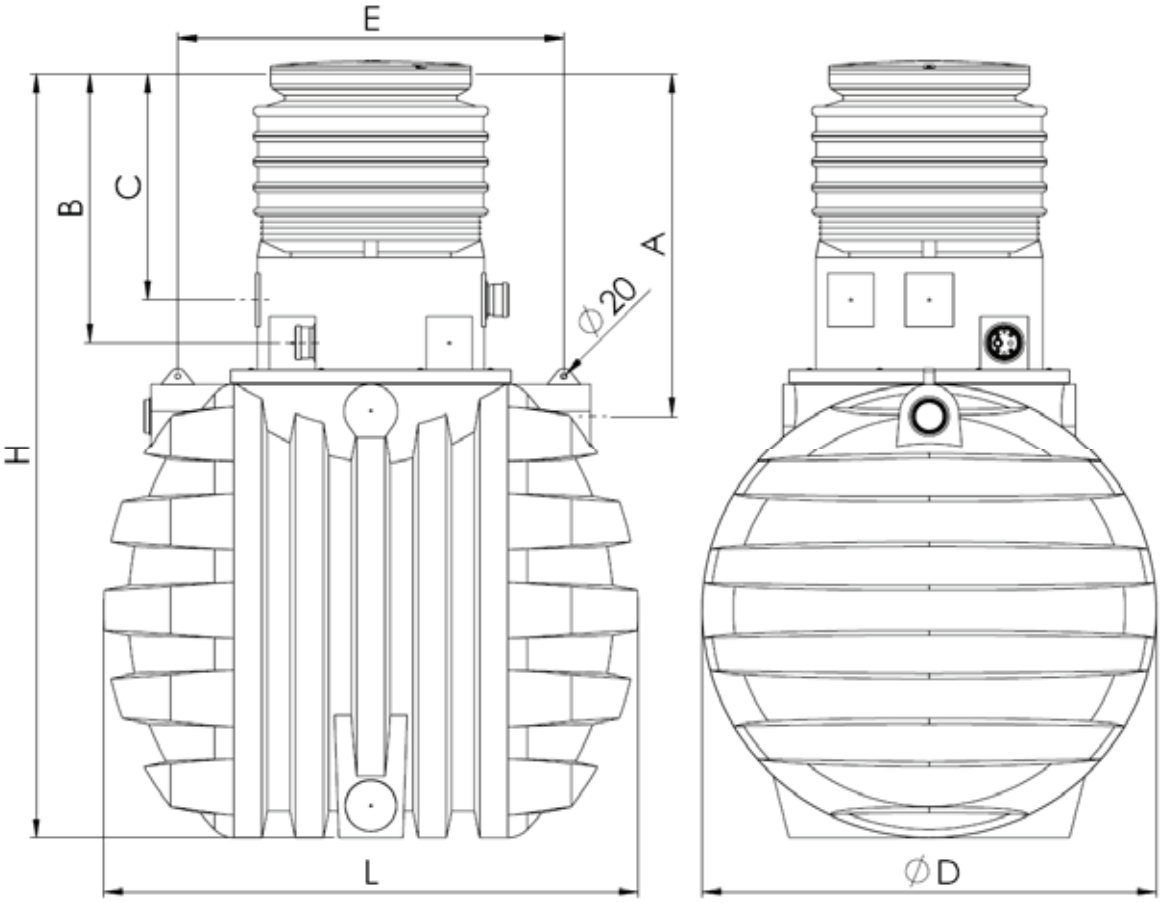

Single tank dimensions

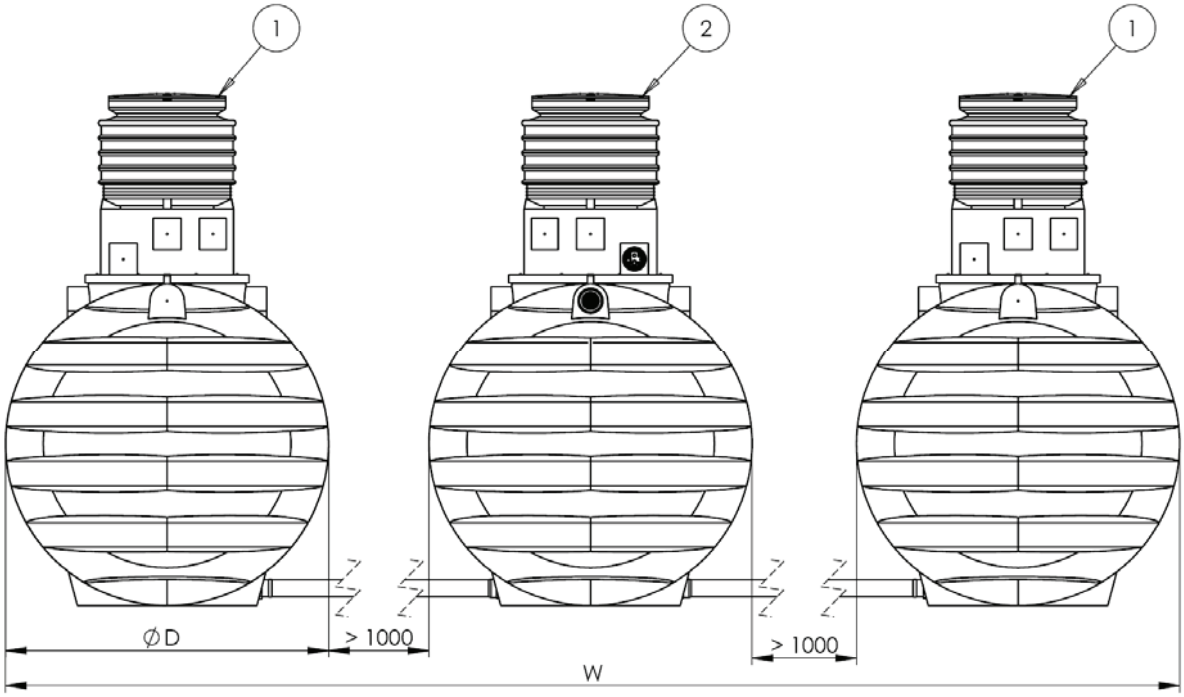

A set of tanks connected in a battery

Standard set consist maximum of four tanks. One of the tanks (indicated as “2” at the drawing) is the fully equipped tank, whilst tanks indicated as “1” are additional tanks without equipment. All tanks in a battery are equipped with ferrules for lower intake connection of Ø 110mm Ø D. The battery system consists of Ø 110mm PVC pipes sections used for connection of individual intakes.

Table of basic dimensions of individual tanks and their sets:

System code	Nominal capacity [litres]	Number of tanks	Distance from a hatch to connections [mm]			Tank diameter [mm]	Height [mm]	Tank length [mm]	Set length [mm]
			A	B	C	D	H	L	W
URW03000BK	3000	1	1330±150	1045±150	890±150	1700	2910±150	2000	-
URW04500BK	4500	1	1330±150	1045±150	890±150	1800	3010±150	2400	-
URW06000BK	6000	1	1230±50	945±50	790±50	2070	3180±50	2400	-
URW09000BK	9000	2 x 4500	1330±150	1045±150	890±150	1800	3010±150	-	4600
URW12000BK	12000	2 x 6000	1230±50	945±50	790±50	2070	3180±50	-	5400
URW18000BK	18000	3 x 6000	1230±50	945±50	790±50	2070	3180±50	-	7210
URW24000BK	24000	4 x 6000	1230±50	945±50	790±50	2070	3180±50	-	10280

2.5 ACCESSORIES

2.5.1 GARDEN BOX

Garden box is used for garden hose connection. It consists of a housing of impact resistant plastic, equipped with lockable lid, ball valve with male thread finished with plastic quick-fitting for garden hose connection.
In its lower part the box is equipped with screwed quick-fitting for connecting pressurised water inlet duct from the tank. Maximum distance between the garden box and the tank is 15m.

The box is adapted for installation directly in the ground.

Box parameters:
Height: 125mm;
Lower diameter: Ø 175mm;
Upper diameter: Ø 205mm;
Ball valve ¾" with male quick-fitting for garden hose;
At the box bottom there is an elbow fitted with clamp joint for Ø 32mm duct.

Prior to winter season empty water from whole box supply duct.

2.5.2 PUMPS

In Garden Eco and Garden Complex systems submersible pumps with integrated pressure automation are used. The automation activates and deactivates the pump depending on output pressure. In case of House systems, the pumps are integrated in collectors located in the buildings. Only the suction hose is routed to the tanks. Regardless of the system type, the suction hose 1" is terminated with a simple counter-return valve, a mesh filter and a floater. The floater provides intake of possibly clear water just from below of the liquid surface in the tank.

General information on usage:

- Supply cable cannot be repaired; if it has been damaged, it must be replaced.
  It is forbidden to pull or handle by the supply cable.
- Submersible pumps should be located on flat surface at the tank bottom; only a rope fitted to the pump can be used for their lifting.
- The pump is intended for pumping of clear water, without abrasive substances and solid or fibre particles.
- A person responsible for the system installation is obliged to guarantee that the electric system has been constructed in accordance with currently abiding standards. The system should be equipped with differential current switch (I An < 30 mA) and correct grounding.

- Prior to pump repair or maintenance make sure it has been disconnected from the power supply and there is no risk of accidental current source connection.
- Prior to their first start-up, all pumps must be primed with water (e.g. after installation or after winter season).
- For the winter season all submersible pumps must be disassembled, emptied of water and stored inside a building.

2.5.2.1 GARDEN ECO SYSTEMS PUMP

Pump parameters:

- power supply 230C AC ± 10 V, 50 Hz
- maximum output pressure 4,5 bar
- pumped liquid temperature range: from +2°C to +3 5°C
- maximum ambient temperature: +40°C
- maximum lifting height: 12m
- maximum operating depth: 5m
- required differential current protection not more than 30 mA
- protection against dry-run activates after 8-10s
- supply cable length : 10m
- pump capacity: 5 litres
- maximum operating time at closed outlet: 5 min (then thermal protection is activated)

EFFICIENCY TABLE	Rated Power P_1 [kW]	Q = flow intensity								
A 1100	1,1	Q	m^3/h	0	0.6	1.2	3.8	2.1	2.4	2.7
			l/min	0	10	20	30	35	40	45
		Total manometric pressure value (water column)								
				44	38	33	28	26	25	17

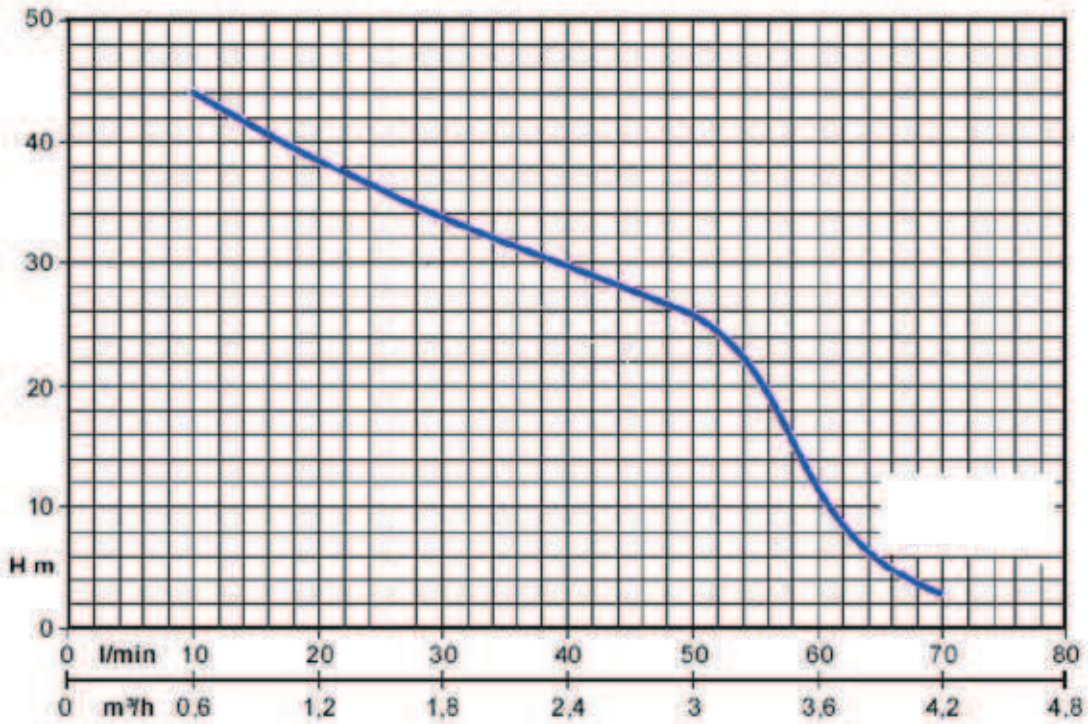

Pump operation characteristics
A graph of pump efficiency vs. pressure
(in column of water)

Detailed pump manual is contained in a separate document.

2.5.2.2 COMPLEX SYSTEMS PUMP

It is a self-priming, submersible pump with integrated automation for pump activation and deactivation after certain pressure has been reached.

Pump parameters 1200:

- power supply 230V AC 50Hz
- power P=1100W
- maximum lifting height: Hmax=48m
- maximum capacity Qmax=95 litres/min.
- number of rotors: - 4
- pumped water temperature range: 0°C -+30°C
- diameter: D=15cm
- height: H=48cm
- weight: 11kg.

Pump operation characteristics

The pump is equipped with integrated electronic controller protecting against damage and controlling its operation (pump activation and deactivation).

Electronic systems protect the pump against dry operation in the following conditions:

- Priming cycle: during start-up until the liquid is primed the pump performs the following operations: four trails 30 second each (motor on) 3 second breaks (motor off). Pump operation

characteristics If the pump is still dry, e.g. liquid priming is unsuccessful; the pump switches off for an hour before the priming cycle is repeated. In case the following trial is unsuccessful a five hours break shall occur. Then, if the water still has not been primed the pump repeats priming every 24 hours until the water is primed.

- Regular mode: if during pump operation, water inlet for 40 seconds is less than its minimum level, the pump switches into emergency mode and starts priming cycle. In such case priming trials are performed after 1,5 and 24 hours until the water is primed.

Electronic system also protects against pump damages caused by blocking overpressure safety valve blocking. The valve blocking is most often caused by dirt and sand and it makes the pump operate even when the end user does not require any water. Protection stops the pump automatically every hour and if there is no failure, the pump restarts immediately. If the valve is blocked, the pump switches off and enters emergency mode. In such case the pump can be restarted only after it has been disconnected and the valve blocking cause has been removed. The pump operates at its best when it is fully submerged in water. The motor cooling system allows for use of pump at minimum priming height for a very short period of time.

Detailed pump manual is contained in a separate document.

2.5.2.3 SELF-PRIMING PUMP JP5 I JP6

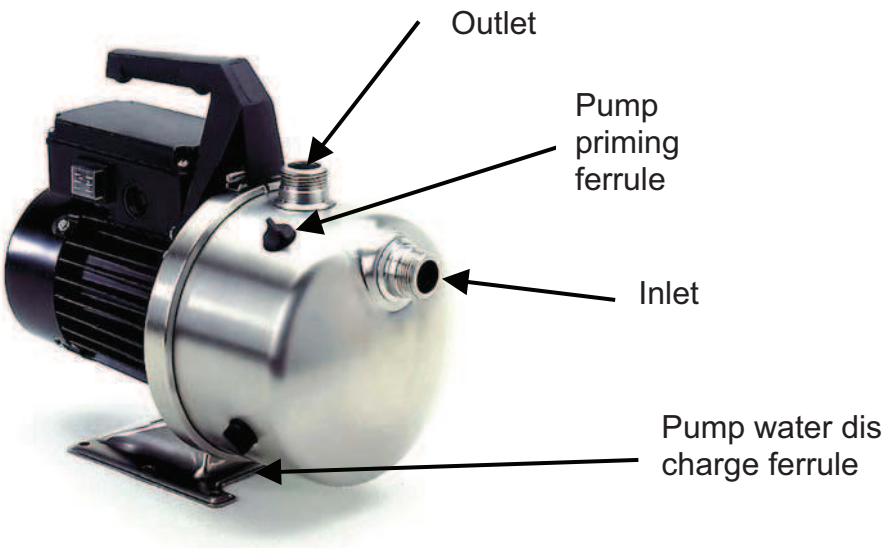

Self-priming pump JP5 or JP6 is used for intake of water from underground tank and for increase of pressure in installation for rainwater use; it is also possible to mount the pump outdoors and use it e.g. for loan watering.

Characteristics:

- maximum pumping water ambient temperature: +40°C;
- pump inner pressure: 6 bar;
- at pressures on suction side over 1.5 Bar, pressing pressure must be at least 2.5 Bar;
- power supply voltage: 230V AC, 50Hz +6/-10%;
- protection class: IP 44;
- relative air humidity, max. 95%;
- maximum distance between suction hose end and the pump: max 8m;
- pump noise level does not exceed 70 dB(A).

Detailed pump manual is contained in a separate document.

2.5.2.4 PRESSURE CONNECTION

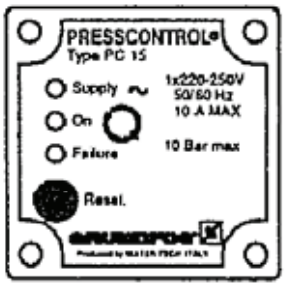

Three indication lamps and a push button have the following functions:

Supply (green)	Tthe lamp is on when Presscontrol is on.
On (yellow)	The lamp is on when the pump operates.
Failure (red)	The lamp is on in case of disturbances see point 7 „Review of disturbances".
Reset	Push button for disturbance signalling cancellation.

Technical data:

- Ambient and water temperature, max.: + 55°C.
- Switching on pressure 1.5 Bar (model PC 15): 2.2 Bar (model PC 22).
- Maximum installation pressure: 10 Bar.
- Power supply voltage: 220-250 V, 50/60 Hz.
- Protection class: IP 54.

Flow controlled valve integrated into Presscontrol and pressure joint provide uniform water flow, without pressure impacts, regardless of water intake volumes. In order to protect the pump against dry-run Presscontrol regulator has a protection unit incorporated which switches the pump off after 10 seconds of operation without water pressing.
In order to avoid it during first start-up, hold RESET push button pressed until the pump is primed with water.
Power supply voltage can be switched on immediately after installation and electric connection of Presscontrol regulator.
The pump switches on if the power supply voltage is on and possibly the switch is installed. Green indication lamp switches on (Supply). If for a period of 10 seconds the pump does not press water, then dry-run protection unit switches the pump off.

2.5.3 FILTERS

Water running from the roof by gutter system carries mechanical pollutants so before it is collected inside the tank it must be initially purified. Purification is realized by various types of mesh filters used in individual systems.
There are collecting and flow filters both in versions integrated inside the tank and in ground version for installation directly in the ground in front of the tank. In the areas of dense tree growth it is recommended to install additional baskets on the gutter drainage faucets or cleaners on drainage pipes.

2.5.3.1 GARDEN ECO I SYSTEM COLLECTING FILTER

When water surplus is discharged to drainage system, the tank is equipped with collecting filter for collecting dirt and its further removal in order not to sludge the drainage system.
Pollutants carried with water remain in the filter and must be periodically removed by the user. Purification is realized by opening lid, removing basket and cleaning it of all impurities; it is also recommend flushing it with running water in order to remove smaller impurities from filter media.

In Garden Eco I systems with drainage bed a filter in the form of a plastic basket without casing is used, fixed with three chains to the bracket. In order to clean the filter you must remove the basket lifting it up together with its bracket.

Collecting filter used in Garden Eco I systems

2.5.3.2 GARDEN COMPLEX I AND HOUSE COMPLEX I SYSTEM COLLECTING FILTER

Garden Complex I system use collecting filter consisting of a plastic cover in which a metal filtering basket is fitted with 0.55mm eyes. Inlet and outlet connections are adapted for standard PVC Ø110mm pipes.

Collecting filter

1. Rainwater inlet from a gutter,
2. Collecting impurities in small eyes filter basket,
3. Additional inlet (in case rainwater is collected from two discharge pipes),
4. Purified water outlet to underground tank.

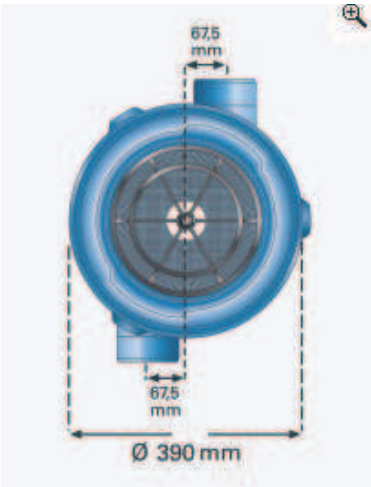

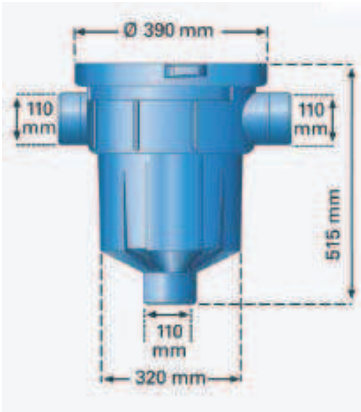

The aforementioned two collecting filter types are installed in the system tanks with drainage bed when active roof surfaces are less than 200m^2.

2.5.3.3 COLLECTING GROUND FILTER VF 1

In case of systems with drainage system, when roof surface from which water is discharged to underground tank is from 200m^2 to 350m^2 ground collecting filter VF1 should be applied. Maximum flow for this filter is 1.5 l/sec = 5.4m^3/h.

Ground collecting filter

1. Rainwater inlet from a gutter which then is dammed and is steadily cascade flowing to a filter pit,
2. Water purification at initial filter,
3. Purification at base small eyes filter (mesh with eyes 0.65mm),
4. Discharge of purified water to underground tank,
5. Impurities are collected in the basket.

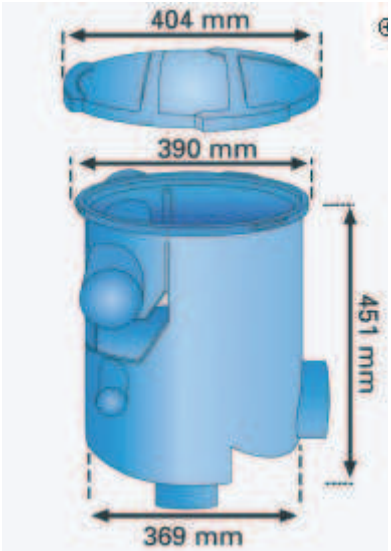

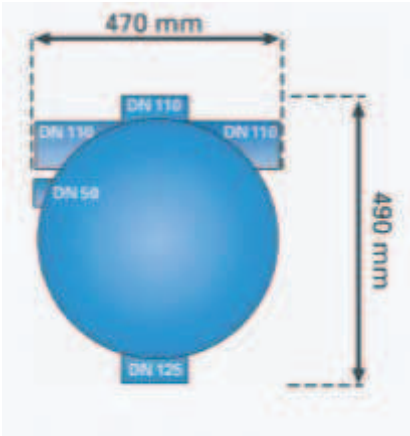

If deeper foundation is required it is possible to use additional telescopic pipe with cover and extended filter holder (50cm).

2.5.3.4 FLOW FILTER FOR GARDEN COMPLEX I AND HOUSE COMPLEX I SYSTEMS

In the systems where rainwater excess is directed to outside rainwater sewage system when roof surface is less than 200m^2 tanks with integrated flow filter should be used.

Flow filter operating principle:

1. Rainwater inlet from a gutter.
2. Collecting impurities on small eye filter (0.7 x 1.7 mm).
3. Excess water outlet with impurities to rainwater sewage system.

Flow filter used in Complex I systems

Impurities collected in the filter and carried with water are periodically discharged outside the tank with periodical rain storms: the water running in the pipe system at high speed purifies the filter. It is however recommended to remove filter media periodically from the tank. Flush it with running water in order to remove smaller impurities.

2.5.3.5 GROUND FLOW FILTER VF1

In the systems where rainwater excess is directed to outside rainwater sewage system, when roof surface is from 200m^2 to 350m^2 the tanks with integrated flow filter of compact type should be used. Maximum sewage flow is 1.5 l/sec = 5.4m^3 per hour.

Flow filter used in Complex II systems

1. Rainwater inlet from a gutter is dammed and is steadily cascade flowing to a filter pit.
2. Water purification at initial filter.
3. Purification at base small eyes filter (mesh with eyes 0.65mm).
4. Discharge of purified water to underground tank.
6. Impurities are collected in the basket.

.

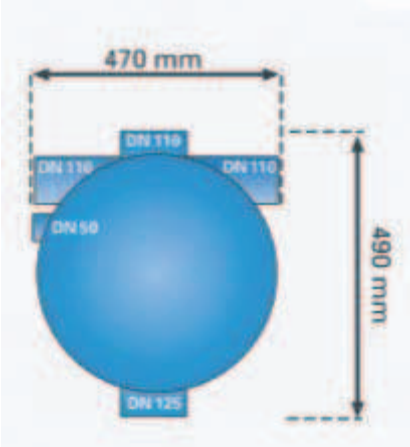

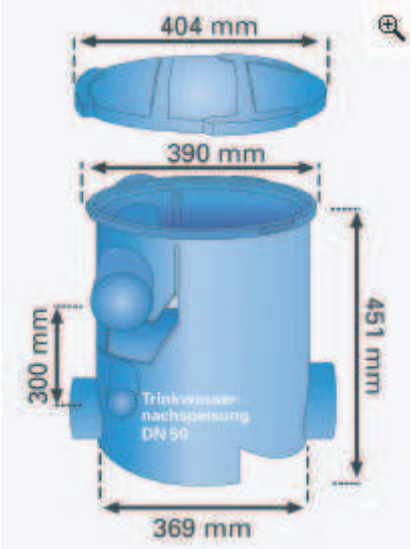

If deeper foundation is required it is possible to use additional telescopic pipe with cover and extended filter holder (50cm).

2.5.3.6 GROUND FLOW FILTER TWIN FILTER

If the roof surface is from 350 to 700m^2, Twin Filter type of filter should be used.
Maximum permitted flow is 3.0 litres /sec = 10.8m^3 of water per hour.

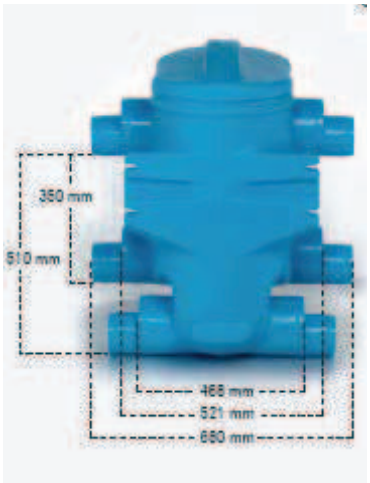

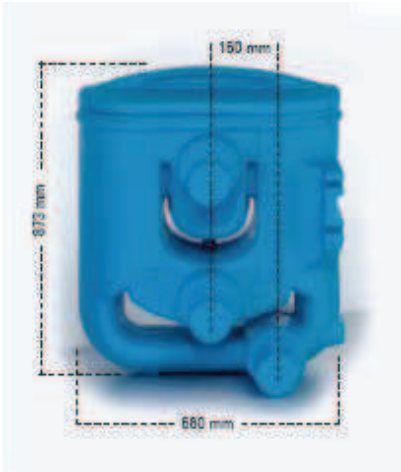

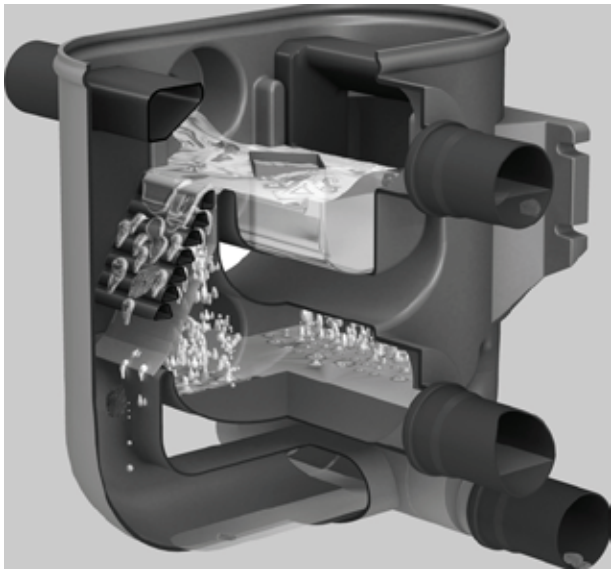

Water entering the filter is directed to two identical chambers. Bigger impurities glow further to sewage system. Initially purified water flows through mesh filter (eye size 0.65mm). Pure water flows further via one or two ducts to the underground tank.
The filter is supplied with plugged connections. Depending on the requirements one or two connection can be used. The connections are adapted for pipes of diameter Ø 110mm lub Ø 160mm.

Detailed operation and installation manual is contained in a separate document.

2.5.4 WATER INTAKE SYSTEM

Water intake consists of:

- plastic floater filled with air of diameter Ø15cm,
- metal mesh filter (eye size 1.2mm),
- simple counter-return valve,
- reinforced, flexible suction hose 1”.

As solid impurities collect at the tank bottom and suspended matter floats on the surface, ideal water intake place is at the level of 15 - 20 cm above liquid surface. The floater allows for maintaining intake mesh slightly below water surface in the tank which provides intake of only pure water into the system.
Periodically check and clean the mesh filter and simple counterreturn valve if required.

2.5.5 TANK HATCHES

Depending on requirements the tank can be covered with different type of hatches:

1. Polyethylene hatch.
Can be used in green areas, in areas where there is no vehicle traffic. It resists constant loads of up to 50kg, and momentary loads up to 150kg. It is fixed directly at the tank telescope with three M8 screws.

.

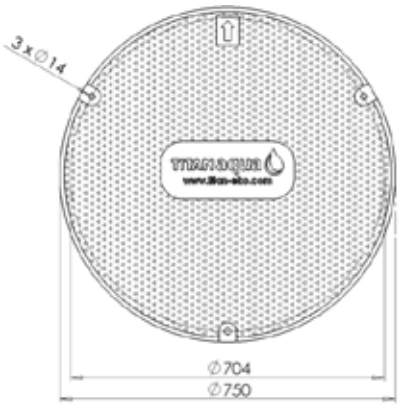

2. Cast iron hatch

In case of greater loads, cast iron hatches must be used:

- Class A15 hatch (up to 1.5t loads). Areas for pedestrians and bikers.
- Class B125 hatch (up to 12.5t loads). Roads and areas for pedestrians, equal areas, parking lots or parking areas for passenger vehicles.

Height of both types of hatches is 80mm.

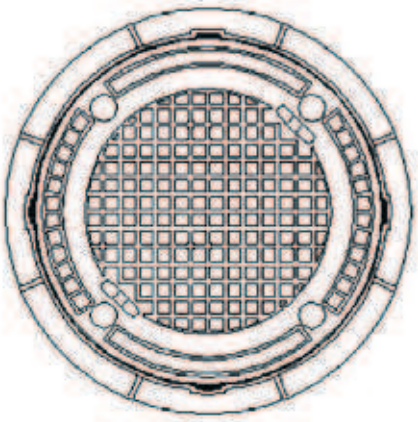

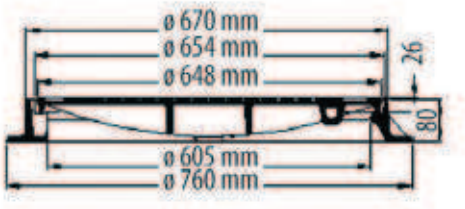

If cast iron hatches are used it is necessary to use load bearing concrete rings which protect the tank against loading.

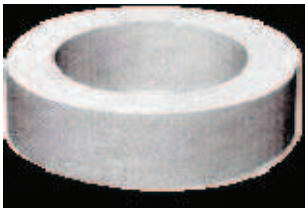

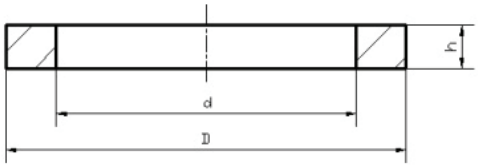

D=1000mm
d=680mm
h=150mm
Weight =155kg

2.5.6 AQUABLOK® DRAINAGE SYSTEM

Each property owner, according to legal regulations, is obliged to manage rainwater in the scope of his/her plot. If the property area is not connected to any rainwater or public sewage system the owner must consider the manner for management of rainwater collected at his/her property.
Ideal solution can be the use of AquaBlok® drainage system behind the tank. The system provides periodical water storage and its uniform drainage in the ground. The system can be applied as a part of a complete rainwater management system or as an independent drainage system directly connected to roof gutters.

AquaBlok® is a polyethylene, almost ideal cube, of single wall dimension ca. 54cm, capacity 150 litres and weight ca. 8kg. It is very easy in transportation and resistant to vertical loads of up to 2.5 t/ m^2 (light version) or up to 15t/m^2 (heavy version).

Light version for loads of up to 2.5 t/m^2 **Heavy version for loads of up to 15 t/m^2**

Technical specification:		
Type	Light version	Heavy version
Dimensions (W x L x H.)	54 x 54 x 55cm	54 x 54 x 55cm
Number of elements per m^3	6.23	6.23
Capacity	0.160m^3	0.160m^3
Percentage of empty space	95%	95%
Water volume	0.152m^3	0.152m^3
Weight	8 kg	9 kg
Density	0.95	0.95
Max vertical load	< 2,5 t/m^2	< 15 t/m^2
Max horizontal load	< 1,0 t/m^2	< 1,0 t/m^2

Advantages of AquaBloks:

- made of environment friendly polyethylene,
- resistant to impact; easy and safe in handling and transportation,
- blocks can be placed in several rows in height and width providing sets of any capacity and shape,
- block can be separated into higher elements;
- can be used in any type of soil,
- can be used on green areas and under areas of vehicle traffic,
- easy (in front or from the above) connection of rainwater inlet pipes,
- easy and quick assembly.

Kingspan Environmental provides selection of appropriate number of blocks depending on drainage area size and ground conditions in the drainage area and depending on e.g. the property shape and size.

Kingspan Environmental offer includes drainage blocks and accessories necessary for their installation:

- Geo-fibres of various widths (3, 4 and 6 metres) Used for wrapping of block sets. It is used in order to prevent water and soil particles against entering Aquabloks. Water collected inside drainage blocks can easily and without any obstructions drain outside to the ground. Surface density of geo-fibre material is 150g/m^2.

- Clamps for connection of adjacent blocks edges and pliers for their pressing.

- Fixings for connection of subsequent layers of AquaBloks.

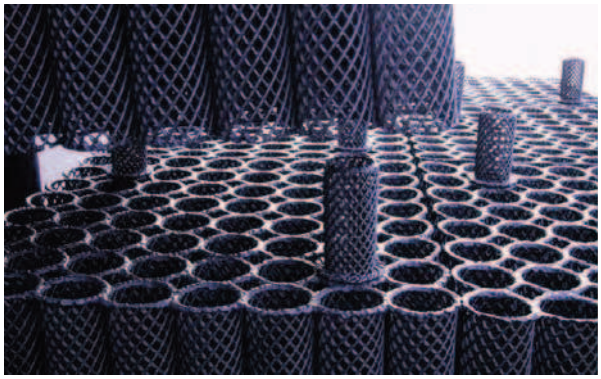

Use two fixings for connection of two blocks.

Kingspan Environmental offers ready sets. The set consists of two blocks and geo-fibre and allows for discharge water to the permeable ground from a roof surface of ca. 50m^2. If the roof surface is greater a number of modules should be increased respectively. Consider such factors as: roof surface, time and intensity of precipitation and soil permeability.

- Ventilators for pipes Ø 110mm. In case of sets of big capacities, install the ventilator on the opposite side of inflow pipe protruding above the ground level. In case of sudden rainwater flow it allows for quicker discharge of air from the system or even for emergency discharge of water outside the system.

2.5.7 MATRIX RAINWATER COLLECTOR

Control collectors Matrix are used for house and garden system House Complex management. These are complete devices consisting of a self-priming pump and electronic control unit equipped with pressure sensors and necessary fitting elements. The collector's task is to intake water from the tank and discharge it to inner rainwater installation in the building, or when the tank is empty to fill in the inner installation with system water.
If the floater switch in the underground tank detects lack of water, the collector automatically switches to system water supply. Hence, even at periodically empty rainwater tank, inner water system is always filled.
Standard control collectors on Kingspan Environmental offer are designed for operation with the system used by maximum two families. Depending on the automation level, two types of collectors are available: Standard and Complex. Other types of control collectors are available for most utility objects upon request.

Matrix Standard
It is a unit for pressure generation in the rainwater management system. The collector is equipped with integrated retention tank connected via suction line with the pump. If the floater switch installed in rainwater tank drops below the set level, electromagnetic valve opens and system water flows into the tank located in the collector. The pump then intakes water from the collector's tank and feeds it to the system.

Matrix Complex
Apart from the functionality of Matrix Standard system, Matrix Complex has an option of switching manual or automatic mode. In manual mode, the collector is supplied only by system water e.g. during winter season.
In automatic mode the retention tank is supplied firstly with rainwater from the underground tank an in case of its lack with system water.
The collector is also equipped with specifically designed container in the shape of letter C reducing the noise during its filling. The collector is covered with an aesthetic lid.
Dosing pump can be connected to Matrix Complex collector. The pump is used when the vertical and horizontal distance between the underground tank is too big (the distances are specified at the scheme in the collector operation manual) for correct pumps operation.
Information on the dosing pump is available upon request.

2.5.8 TIGHT CULVERT

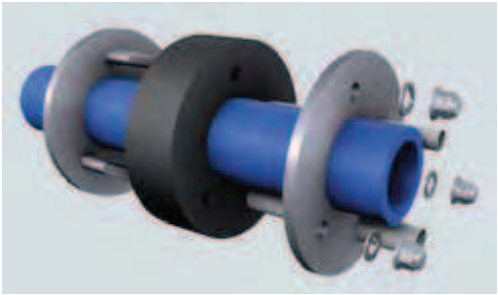

Duct and cable culvert via tank downpipe must be tight in order to prevent ground water against entering the tank. It is realized by use of tight culverts with openings adapted for ducts diameters:

- Ø 32mm ((suction or pressing hose culvert);
- 2 x Ø 12mm (culverts for pump supply cable and floater switch cable).

Individual culvert holes are used depending on a given system version. Unused holes are plugged. Tightening the screws of the tight culvert presses the middle rubber element allowing for obtaining tightness.
The section of pressing line running through the tight culvert is made of stiff plastic. Further parts of pressing line are connected to it with clamping pressure fittings for pipes of Ø 32mm.
The culvert is constructed in the section of PVC Ø 110mm pipe with a faucet protruding outside the tank, and the whole is plugged. This allows for easy connection of subsequent sections of protection.

2.5.9 OVERFLOW SIPHON

The tank overflow is an element which protects the system against unpleasant odours penetration (siphon) and against access of rodents to the tank.

At the end of the tank vertical inlet pipe, element for steady inlet is fixed hus impurities collected at the tank bottom are not stirred by inflowing water.

III. SCOPE OF SUPPLY

Kingspan Environmental company offers a range of various system types allowing for selection of the most optimum solution for a given location. Each system scope of supply includes its basic elements. The following tables present sets of individual system types (code and general description).

GARDEN SYSTEMS

System code	Capacity [l]	Equipment	Filter type	Pump type
Garden Eco I system				
URW03000BK/SG/BF/P02	3000	Complete tank with overflow inlet and outlet, integrated collecting filter, riser pipe and telescope, without a lid, with a pump, and water inlet pipe to round garden box.	Collecting	Eco
URW04500BK/SG/BF/P02	4500			
URW06000BK/SG/BF/P02	6000			
URW09000BK/SG/BF/P02	2x4500			
URW12000BK/SG/BF/P02	2x6000			
URW18000BK/SG/BF/P02	3x6000			
URW24000BK/SG/BF/P02	4x6000			
Garden Eco II system				
URW03000BK/SG/NF/P02	3000	Complete tank with overflow inlet and outlet, without filter, with riser pipe and telescope, without a lid, with a pump, and water inlet pipe to round garden box.	Collecting or flow external ground (not included in the supply)	Eco
URW04500BK/SG/NF/P02	4500			
URW06000BK/SG/NF/P02	6000			
URW09000BK/SG/NF/P02	2x4500			
URW12000BK/SG/NF/P02	2x6000			
URW18000BK/SG/NF/P02	3x6000			
URW24000BK/SG/NF/P02	4x6000			
Garden Complex I system				
URW03000BK/SG/GF/P01	3000	Complete tank with overflow inlet and outlet, integrated collecting filter, riser pipe and telescope, without a lid, with a pump, and water inlet pipe to garden box.	Collecting	Divertron
URW04500BK/SG/GF/P01	4500			
URW06000BK/SG/GF/P01	6000			
URW09000BK/SG/GF/P01	2x4500			
URW12000BK/SG/GF/P01	2x6000			
URW18000BK/SG/GF/P01	3x6000			
URW24000BK/SG/GF/P01	4x6000			
URW03000BK/SG/CF/P01	3000	Complete tank with overflow inlet and outlet, integrated collecting filter, riser pipe and telescope, without a lid, with a pump, and water inlet pipe to garden box.	Flow	Divertron
URW04500BK/SG/CF/P01	4500			
URW06000BK/SG/CF/P01	6000			
URW09000BK/SG/CF/P01	2x4500			
URW12000BK/SG/CF/P01	2x6000			
URW18000BK/SG/CF/P01	3x6000			
URW24000BK/SG/CF/P01	4x6000			
Garden Complex II system				
URW03000BK/SG/NF/P01	3000	Complete tank with overflow inlet and outlet, without filter, with downpipe and telescope, without a lid, with a pump, and water inlet pipe to round garden box.	Collecting or flow external ground (not included in the supply)	Divertron

HOUSE SYSTEMS

System code	Capacity [l]	Equipment	Filter type
House Complex I system			
URW03000BK/SH/GF/NP	3000	Complete tank with overflow inlet and outlet, with collecting filter, with riser pipe and telescope, without a lid, with a pump, and water inlet pipe to round garden box.	Collecting
URW04500BK/SH/GF/NP	4500		
URW06000BK/SH/GF/NP	6000		
URW09000BK/SH/GF/NP	2x4500		
URW12000BK/SH/GF/NP	2x6000		
URW18000BK/SH/GF/NP	3x6000		
URW24000BK/SH/GF/NP	4x6000		
URW03000BK/SH/CF/NP	3000	Complete tank with overflow inlet and outlet, with collecting filter, with riser pipe and telescope, without a lid, with a pump, and water inlet pipe to round garden box.	Flow
URW04500BK/SH/CF/NP	4500		
URW06000BK/SH/CF/NP	6000		
URW09000BK/SH/CF/NP	2x4500		
URW12000BK/SH/CF/NP	2x6000		
URW18000BK/SH/CF/NP	3x6000		
URW24000BK/SH/CF/NP	4x6000		
House Complex II system			
URW03000BK/SH/NF/NP	3000	Complete tank with overflow inlet and outlet, without a filter, with riser pipe and telescope, without a lid, with a pump, and water inlet pipe to round garden box.	Collecting or flow external ground (not included in the supply).
URW04500BK/SH/NF/NP	4500		
URW06000BK/SH/NF/NP	6000		
URW09000BK/SH/NF/NP	2x4500		
URW12000BK/SH/NF/NP	2x6000		
URW18000BK/SH/NF/NP	3x6000		
URW24000BK/SH/NF/NP	4x6000		

Upon product receipt, (depending on the option) make sure that your set is complete. Such elements as pipes, PVC connectors, drainage blocks, ground filters, rainwater collectors, hatches etc. must be selected and purchased additionally.
Pumps JP5, JP6 with pressure fitting and rainwater collectors of Standard and Complex type can be connected to the aforementioned systems.

IV. SYSTEM SELECTION

The following is the manner of selection of basic underground system elements.

4.1 TANK SIZE SPECIFICATION

Upon selection precisely specify the following factors:

a) Annual precipitation in litres per m^2 or in mm.

b) Effective roof surface. It is a horizontal projection of the roof surface, so here drop of hipped roof end to horizontal plane is insignificant. Water can also collect only from one part of the hipped roof end, then for further calculations only the value of such hipped roof end projection is considered. For further calculations consider also the factor closely related with the roofing material and the roof slope.
0.95-0.9 bevel roofs covered with steel sheet or ceramic tiles;
0.8 bevel roofs covered with concrete tiles;
0.6 flat roofs;
0.3 green roofs.

c) Water demand. If rainwater is to be used solely for garden watering, daily value of water consumption is at the level of 60 litres per 1 m^2 of the garden. If the water is used for household purposes, such as washing, toilet flushing and cleaning, consumption of ca. 67 litres per person must be assumed. If rainwater is to be used both for household and garden applications the water demand value is the result of product sum of a number of persons times daily water consumption and the garden area times water consumption necessary for watering of 1 m^2 of loan surface.

The following is the calculation form (blue fields present an example):

Annual rainfall

Average values of precipitation (l/m^2)	x	Effective roof surface (m^2)	x	Roofing material coefficient	=	Water intake (l/year)
700	x	120	x	0,8	=	67200
	x		x		=	

Annual water demand

Toilet flushing:	Per person/per year:	9015	x	4 persons	=	36060	___	persons	=	___
Washing	Per person/per year:	3685	x	4 persons	=	14740	___	persons	=	___
Cleaning/ car washing:	Per person/per year:	800	x	4 persons	=	3200	___	persons	=	___
Garden watering:	Per m^2/per year	60 l	x	500 m^2	=	30000	___	m^2	=	___
				TOTAL		**84000**		**TOTAL**		

Rainwater tank capacity

67200 + 84000	x	21 days	=	Necessary tank capacity – 4350 litres
2		365		**Optimum tank capacity** – 4500 litres

_____ + _____	x	21 days	=	Necessary tank capacity _____ litres
2		365		**Optimum tank capacity** _____ litres

It is more advantageous if the tank capacity is greater as in case of lack of regular precipitation this does not limit the s=consumption of rainwater in the building. In case of detached houses, in time, roof surface usually increases due to reconstruction and addition of new roofs. Soft rainwater intake allows for partial independency from system water hence for reduction of the object operational costs. It also helps to protect the natural environment.

Selection of the proper tank size can also be done on the basis of special selection software available at Kingspan Environmental company.

4.2 FILTER TYPE SELECTION

For roof surfaces of up to 200m^2 flow or collecting filters, integrated in the tank riser pipe, can be applied.
Filters for greater surfaces must be installed in front of the tank.
For roof surfaces from 200m^2 to 350m^2 it is recommended to use ground filters VF1 and for surfaces from 350m^2 to 700m^2 flow filter of Twin Filter type.
In case of flow filter application, impurities flowing with rainwater from the roof are discharged to rainwater sewage system.
In case of collecting filter application impurities collect in a special basket which should be cleaned on regular basis.

4.3 NUMBER OF DRAINAGE BLOCKS SELECTION

In case of systems with collecting filters application it is necessary to use rainwater excess drainage system AquaBlok behind the tank.
In order to select the required number of Aquabloks the following information is required:

- drainage area surface [m^2],
- soil permeability/type,
- average precipitation intensity.

In case of soil permeability data lack this can be specified by percolation test.
Dig an excavation to the depth of the designed system location. Then, at its bottom, dig a pit of plane dimensions 0.3m x 0.3m and 0.15m depth. Prior to measurements, wet the ground around the pit. In case of sand it is enough to use several or several dozens of water which is quickly absorbed by the soil.
In case of poorly permeable and dry soils, wetting should take several dozens of hours to 24 hours. Then, additionally pour ca 12.5 litres of water into the pit. Water depth in the pit shall then be ca. 139 mm. at this point, start the timer and measure time (tp) until water is totally absorbed by the pit walls and its bottom. Soil filtration coefficient is specified on the basis of the time measured, assuming that hydraulic gradient equals one. Instead of waiting for total water absorption you can use measured time of water table drop in the pit by 10 mm (t1). After the test, make a drill at minimum depth of 1.5 m below the pit bottom to specify the type of soil in the ground. Soil classes depending on water absorption time are presented in the following table.

Soil permeability class	Water absorption time		Soil type
	t_p min/139 mm	t_1 min/10 mm	
A	To 2	To 0.2 [12s]	Rubble, gravel, aggregates
B	2 to 18	0.2 to 1.5	Thick and medium sands
C	10 to 100	1.5 to 13	Thin sands, loesses
D	180 to 780	13 to 60	Dust and clay sands
E	>780 (13 h)	> 60	Clays, silts, solid rock

After soil type is specified you can start specification of the required capacity of the drainage bed. A set of number of Aquabloks depending on drainage area surface and soil type, assuming that rain intensity amounts to 150 l/s*ha, by 30 minutes is presented in the following table:

		Drainage area m^2							
		50	100	150	200	250	300	350	400
Thick sands 1 x (10^{-3})	v [m^3] no of blocks	0.08 1	0.16 2	0.24 2	0.32 3	0.40 3	0.48 4	0.56 4	0.64 5
Medium sands 5 x (10^{-4})	V [m^3] no of blocks	0.27 2	0.53 4	0.80 6	1.06 8	1.33 9	1.59 11	1.86 13	2.12 15
Thin sands 5 x (10^{-5})	v [m^3] no of blocks	0.75 5	1.50 10	2.25 15	3.00 20	3.75 25	4.50 30	5.25 35	6.00 40
Dust and clay sands 5 x (10^{-6})	v [m^3] no of blocks	1.25 9	2.5 17	3.75 25	5.00 34	6.25 42	7.50 50	8.75 59	10.00 67
Silt clay 5 x (10^{-7})	v [m^3] no of blocks	2.10 14	4.20 28	6.3 42	8.40 56	10.50 70	12.60 84	14.70 98	16.80 112

The table allows for general specification of the required number of AquaBloks. The numbers may vary in case of different e.g. rain intensity, necessity of blocks location in several layers, different soil type etc.
In order to make the most optimum selection of AquaBloks, contact Kingspan Environmental Sp. z o.o. representative.

4.4 AUTOMATION

If the system is to be used solely for garden watering or e.g. car washing it is enough to use one of Garden type systems with appropriate filter. All pumps for Garden systems have pressure switch integrated.
In case of House type systems you can use the simplest system based on self-priming JP5 or JP6 pump controlled with pressure switch or one of two types of collectors for water intake and distribution management.

V. SYSTEM INSTALLATION

5.1 FACTORS INFLUENCING THE MANNER OF INSTALLATION

Prior to system installation preparation the following arrangements must be considered:

1. Selection of optimum system for a given object.
2. Detailed selection of additional elements which are not included in the set i.e. PVC Ø 110mm, pressure cable Ø32mm, fittings, rainwater collector if required, ground filter, etc.
3. Optimum specification of the position of individual elements and system installation with respect to other objects (buildings, roads, banks etc.)
4. Specification of soil type (permeable ground, impermeable ground, solid ground etc.)
5. Specification of maximum ground water level.
6. Freezing zone depth (most often from 0.8 to 1.2m).
7. Specification of possible area loads e.g. pedestrian and vehicle traffic.

In order to specify area characteristics (positions 4, 5, 6) request information from an expert or at the local office.

5.2 LEGAL REQUIREMENTS

The installation must be prepared in accordance with:

- PN-EN 1610 standard on sewage system routing,
- National, local and regional regulations,
- Investor guidelines,
- Manufacturer brochures and guidebooks.

In accordance with current regulations assembly of rainwater usage systems does not require any building permit. Prior to the investment realization lodge the report to District Self-Government Office. We suggest you should contact the administration offices at the place of residence (Town Council, District Office etc). All information in this respect can be obtained at the Building Department appropriate for a given region.
Rainwater usage installations applied for garden watering, car washing or cleaning works do not require any application. If they are also used for household purposes (toilet, washing) it should be reported to drinking water supply company. It is crucial that rainwater installation is independent from water inlet installation subsequently used for food preparation or personal hygiene and it cannot be connected to it at any point.
Regulations require effluent water to be discharged to rainwater sewage system or public sewage system and in case it is not accessible – discharged or drained at the plot area, stored in retention tanks or discharged to drain wells.

.

5.3 PREPARATION OF EXCAVATIONS

Ground tanks should be founded during house building as later installation would be far more difficult and costly. Installation should not be made during bad weather (rain, strong wind). First stage is to plan the position of individual elements of a given system i.e. the tank, drainage bed, pipes, ground filter etc. Observe the following principles:

1. If possible locate the system elements in green areas without vehicle traffic.
2. Maintain as small distances as possible between the building and the tank and farther individual system elements.
3. Pipes for individual elements connection should run as straight sections. In case of direction change requirement, provide well installation in such location.
4. Upon the tank location setting, consider the following:
   a) the tank must be founded at a distance of more than 1.2m from fixed objects;
   b) the tank excavation bottom must be of width and length at least ca. 50cm bigger than the tank dimensions;
   c) ground surcharge layer above the tank should in general not exceed 100cm. If deeper tank foundation is required, use concrete load relief stubs or increase the level by using wells with pumps (pumping stations); in such cases always contact the distributor or the manufacturer;
   d) provided not loaded area of at least 0.6m width around the excavation edge.
5. Excavations of vertical walls without support or span are permitted if there is no ground water in the ground and the area adjacent to the excavation edges is not loaded in the area of width equal to at least the excavation depth and in soils:
   a) compact soils (clays etc.) to depth of 1.5m;
   b) poorly compact (clay sands, dusts, loess) – to depth of 1.25m.

   In case of other soil types provide excavation walls boarding, so vertical walls are boarded and spanned. On dry and compact soils open-work boarding- not tight is permitted. In case of not reinforced and not urbanized areas the excavations can be constructed as vast space with banks of drop depending on the soil type (minimum 1:1, 15). Drop depends on soil compactness and its type. The following table presents dimensions of excavation for various tank sizes (or tank sets).

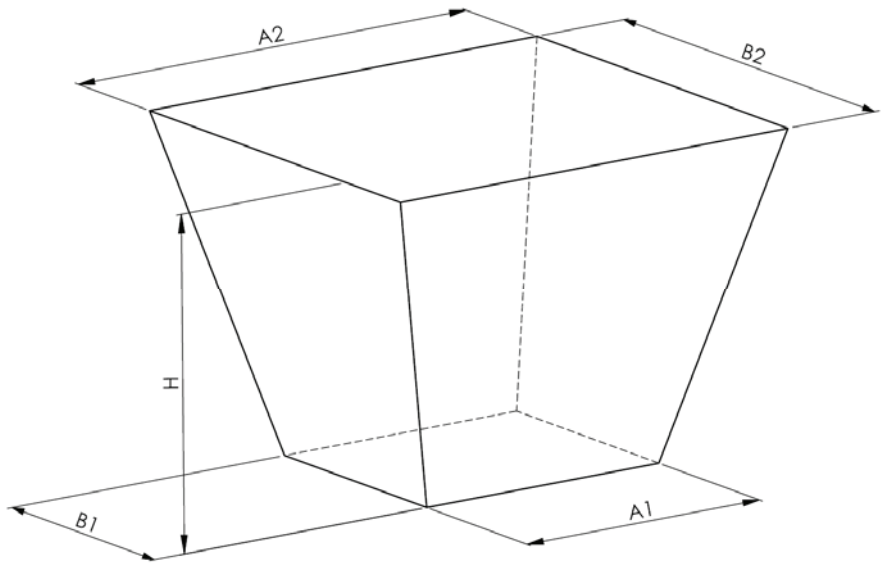

Excavation dimensions for individual tank sizes.

Tank symbol	Capacity [L]	Length and width of excavation In compact soils In compact and semicompact state; inclination: 2 : 1 [m]	Length and width of excavation In poorly compact soils In compact and semi-compact state; Inclination: 1 : 1.25 [m]	Length and width of excavation In uncompacted soils inclination: 1 : 1.5 [m]	Excavation depth [m]	Length and width of excavation bottom [m]
URW03000BK	3000	5.8x6.1	10.4x10.7	12x12.3	3.1±0.15	2.7x3.0
URW04500BK	4500	6x6.6	10.8x11.4	12.4x13	3.2±0.15	2.8x3.4
URW06000BK	6000	6.4x6.8	11.6x11.9	13.3x13.6	3.4±0.05	3.1x3.4
URW09000BK	2x4500	9x6.8	14.1x11.9	15.8x13.6	3.4±0.15	5.6x3.4
URW12000BK	2x6000	9.8x6.8	14.9x11.9	16.6x13.4	3.4±0.05	6.4x3.4
URW18000BK	3x6000	11.6x6.8	16.7x11.9	18.2x13.4	3.4±0.05	8.2x3.4
URW24000BK	4x6000	14.7x6.8	19.8x11.9	21.5x13.4	3.4±0.05	11.3x3.4

Dimensions presented in the table are approximate and in particular cases the values can vary e.g. due to different inlet ordinate or different ground conditions.

6. In excavation near banks the following protections should be applied:
   a) in the area adjacent to upper bank edge at width equal 3 times excavation depth the area should have appropriate slopes allowing for active precipitation water outflow from the excavation edge;
   b) disturbance of natural ground condition of the excavation bottom and excavation slopes must be removed with application of safe drop in case of banks.
7. Waste ground from excavation cannot be loaded on the excavation banks. In case of high ground water level provide the excavation drainage.
8. In case of mechanically dug excavations leave a layer of ground above the designed excavation bottom ordinate, at least 20cm thick, regardless the soil type. Not dug layer of ground must be removed from the excavation bottom manually. The excavation bottom must be constructed with reference to designed ordinates in normal ground conditions with accuracy of 5-10cm for manual excavation and 20cm for mechanical excavation. The excavation walls and bottom cannot contain any stones, beams, debris and other hard objects which may cause mechanical damage to the system elements.
9. During ground works do not disturb (loosen, wetting) the original ground of the excavation bottom. Ground works must be conducted with due diligence, at appropriate fast pace without keeping the opened excavation for too long. Disturbed ground must be removed from the excavation bottom replacing them with the ground reinforced with compacted sand layer of at least 20cm thickness (after compacting).
10. During ground works all collisions with underground reinforcement should be protected against damage.
11. In pedestrian traffic areas, for the time of excavation construction, the excavation must be protected with a fence of 1.0m height and marked with warning signs and warning lights at night.

THE FOLLOWING ARE THE MANNERS FOR TANK INSTALLATION IN PARTICULAR CASES:

1. **Foundation at a bank and slope**
   If there are banks or slopes in the vicinity of tanks, at distance less than 5m, it is necessary to construct a resistance wall which overtakes the ground pressing force.
   The wall construction requires performance of static calculations by the designer. The wall must however be higher by min. 50cm than the tank body and cannot be located at a distance less than 100cm from the tank.

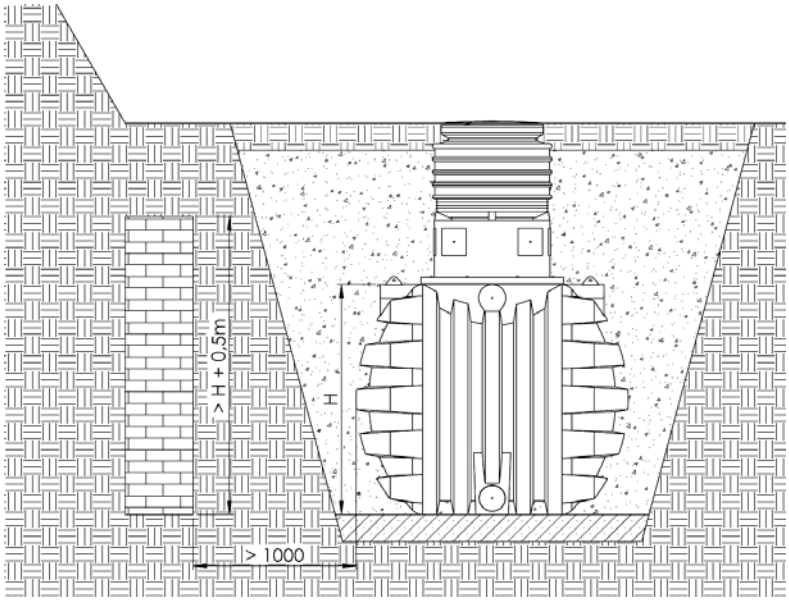

Installation in the bank vicinity

2. **Foundation at the road**
   In case the tank is located near communication roads provide distance between the tank and the road not less than the excavation depth.

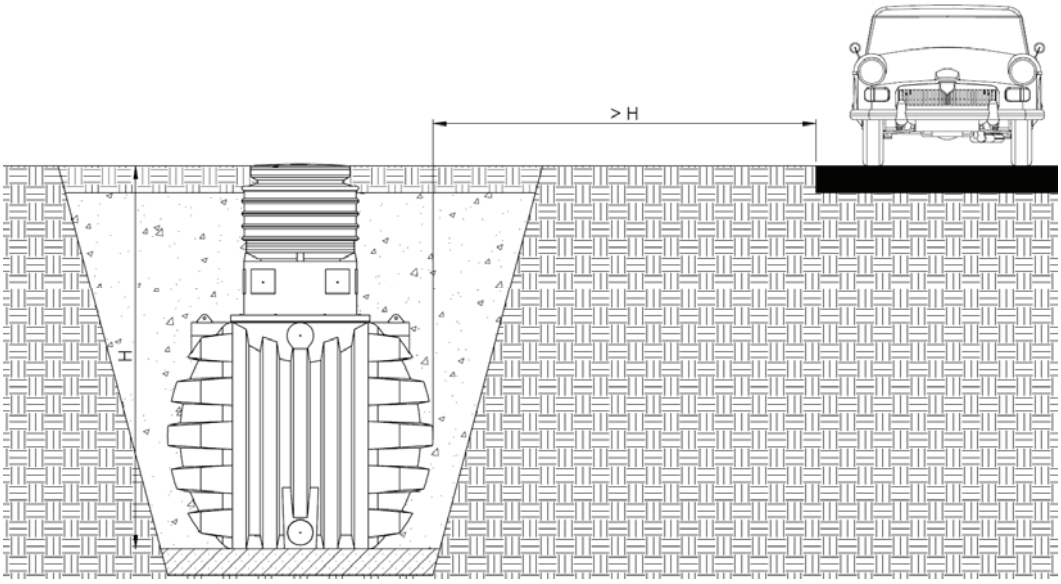

Installation in the road vicinity

3. **Foundation at greater depth**

If, due to constructional reasons, it is necessary to found the system elements at greater depth than it has been assumed for the standard system, you should:

- order the tank in a version prepared for deeper foundation (thicker walls of the tank and its collar, extended mobile element – shaft);
- if ground filter are applied, order additional downpipes sections;
- nstalled reinforced concrete slab above the tank which shall overtake the ground pressing force (slab and reinforcement parameters to be agreed with the designer). The tank body, optionally, can be filled to the level of connections with thin concrete.

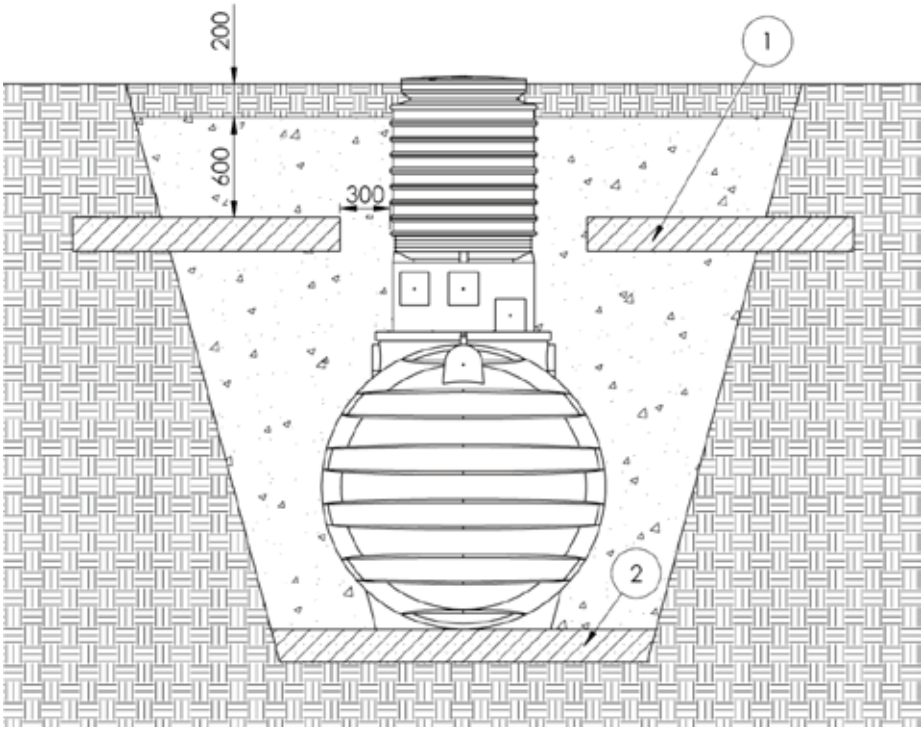

Installation of tank at deeper depth

4. **Installation at locations with high ground water level**

Maximum periodical submersion of the tank in ground water cannot exceed maximum water level of the tank. The level is set by overflow ferrule in the tank body. Otherwise, not filtered water entering the tank may result in the tank contamination (sludging) and as a result is equipment damage. Another negative result is operation of strong uplift pressure which may even result in the tank uplifting due to the liquid uplift pressure.

This can take place in wet areas with compact and impermeable soils. In such situation the details of protection elements must be agreed with the designer.

The tank can be protected by three manners:

a) installation of concrete slab below the tank and fixing the tank to it with slings,
b) installation of the tank in a concrete sheath,
c) installation of drainage well with submersible pump with a floater in the excavation near the tank; the pump shall discharge water excess to the drainage system.

In the first two cases the tank loading elements must have weight greater than the weight of tank filled with water.

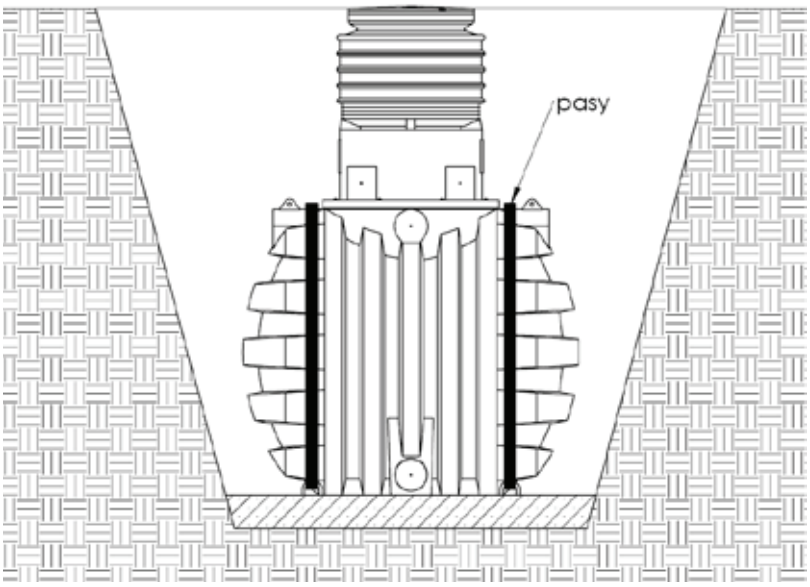

The tank fixed with slings to a concrete slab

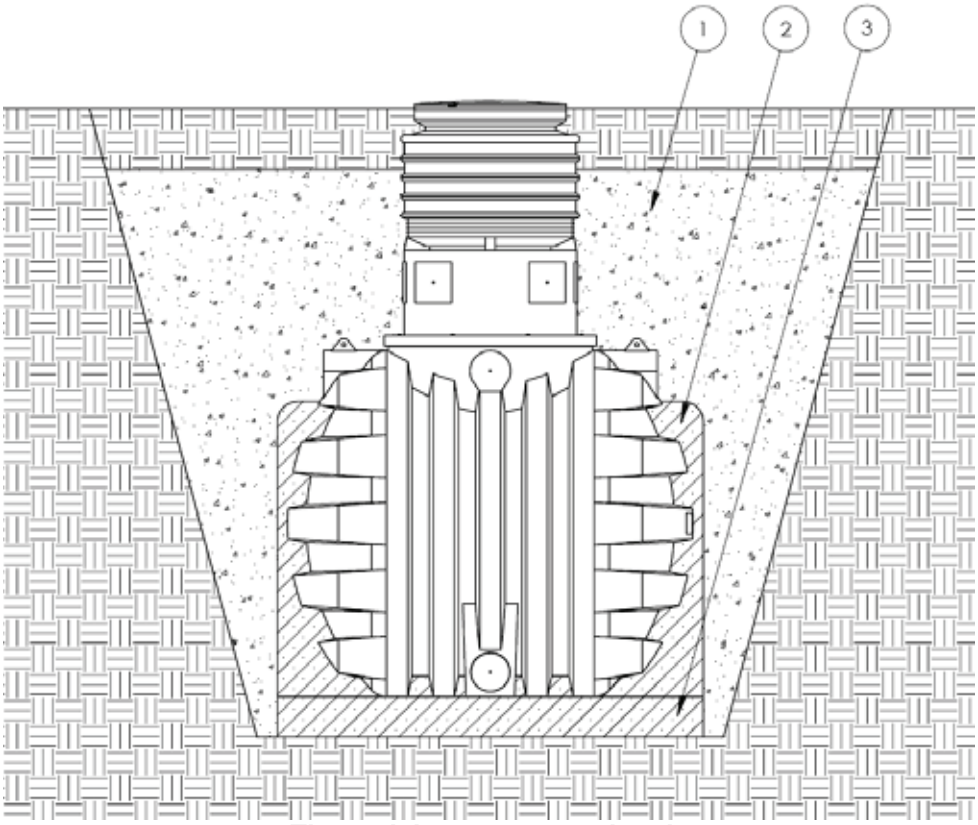

The tank in a concrete sheath

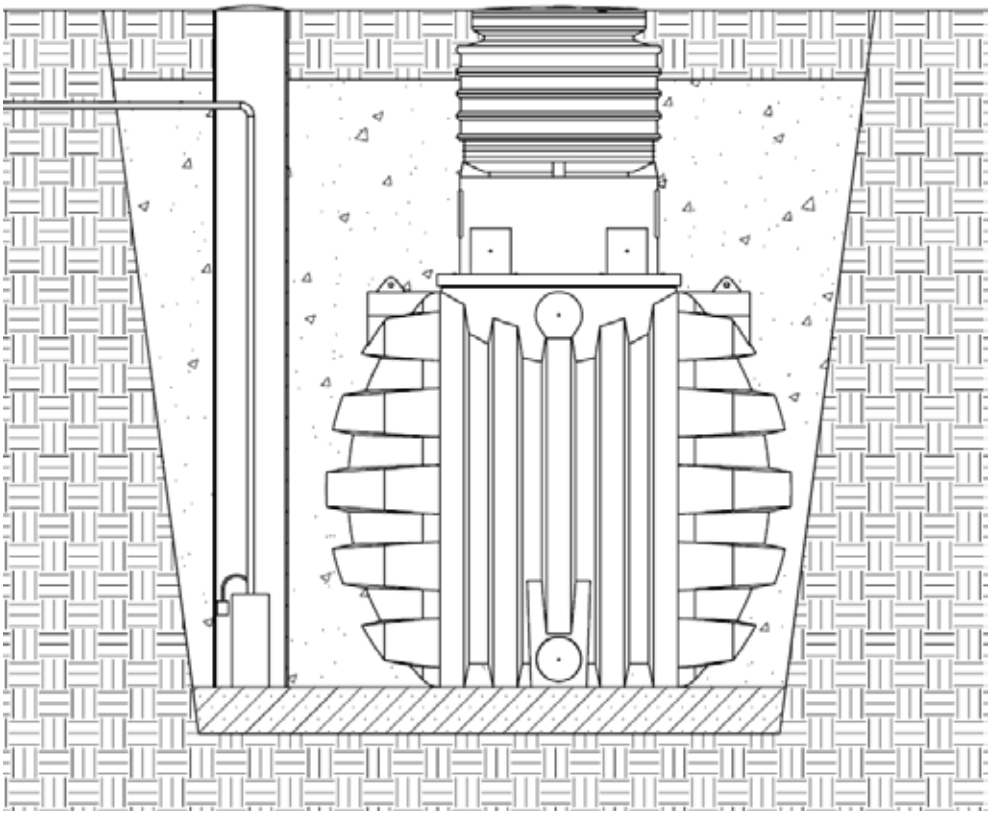

Installation with a drainage well and submersible pump

5. Installation of a set of tanks.

Systems with tanks of capacity 9000, 12000, 18000 and 24000 litres require several tanks to be connected in sets of 2, 3 or 4 tanks by means of lower connections. The distance between tanks must be at least 1m.

For such distance connecting sections of Ø 110mm PVC pipes are prepared. In such case it is very important to precisely compact and level the ground for tanks foundation.

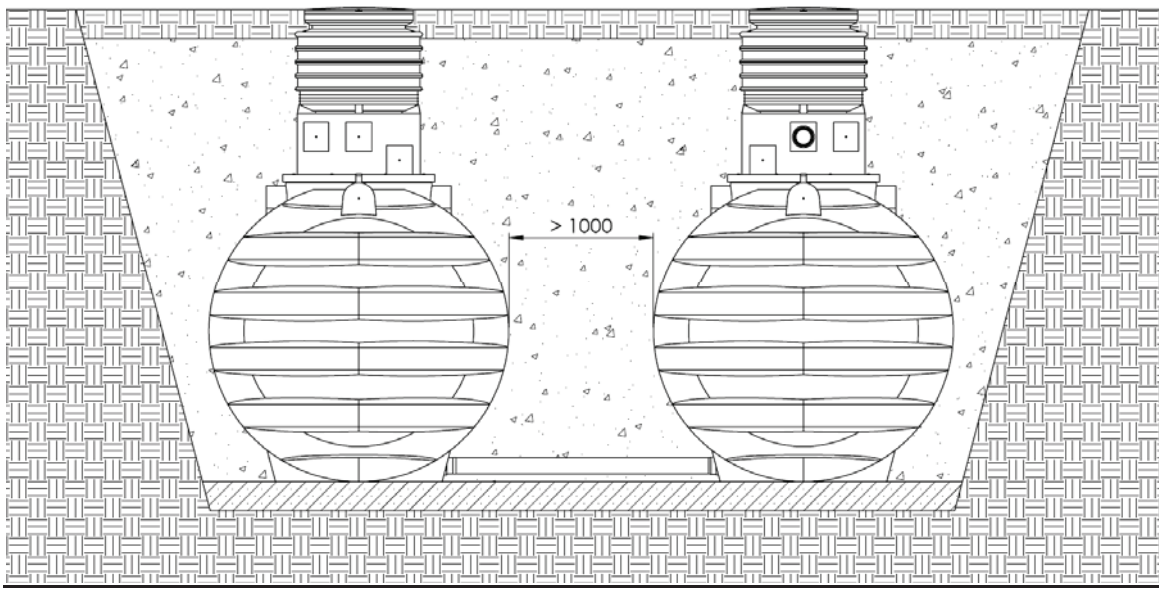

Connection of many tanks

The aforementioned schemes are general recommendation. For each location which requires non-standard installation it is necessary to make a detailed design.

5.4 TANK INSTALLATION

1. Preparation of the excavation bottom

At the excavation bottom construct the foundation on which the tank shall be founded.

Dry soil

- in case of installation in dry easily permeable soil the bed can be made of 15-20cm of compacted gravel of granularity 8/16.

Wet/watered soil

- in case of wet soil provide thin concrete slab of 15-20cm thickness.

If the tank is to be protected by slings against uplifting then weight of the slab must be at least equal to the weight of tank filled with water. Fix four stainless anchor bolts in provided holes in the slab.
After concrete has hardened make 10cm layer of compacted gravel - compactness degree 90% - on its surface.

2. Lowering of the tank to the excavation bottom and its positioning

Tanks should be lowered empty and with appropriate slings and cross-bars. The process must be performed with extreme care, in vertical position, in order not to damage the tank jacket and its equipment. Positioning the tank in the excavation do not shift it, only lift and lower.
Prior to further operations carefully check if the equipment is not damaged or shifted.

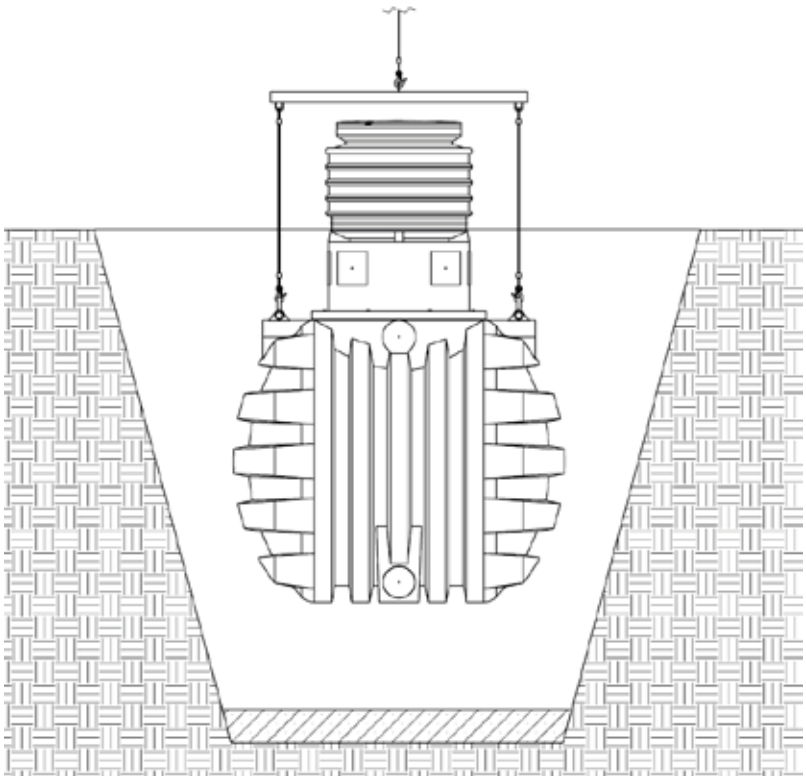

Location of the tank at the excavation bottom

In case of wet soil if the tank is to be fixed to the slab with slings, make sure the slings or belts are made of water proof material. If drainage system is to be fitted or if tanks are to be connected in sets realize such works at this stage of installation.

3. Excavation filling

1. Prior to backfilling, fill the tank with water to ca. 1/3 of its height.

2. Space between the tank and the excavation should be subsequently backfilled with layers of ca. 30cm. with gravel of 0/4mm granularity to 1/3 of the tank height. Materials from the excavation, such as clay sand, clay or organic soil (humus) are not appropriate for backfill material. During compacting, avoid damages to the tank and use manual rammer; do not use mechanical rammers. Make sure the excavation is hardened equally on all sides; compactness degree must be above 90%.

3. Backfill material cannot bet into pipe connections or to the tank. Then the tank is filled with water to its 2/3 of height and backfilled with layers of 30cm as aforementioned compacting to 2/3 of the tank height.

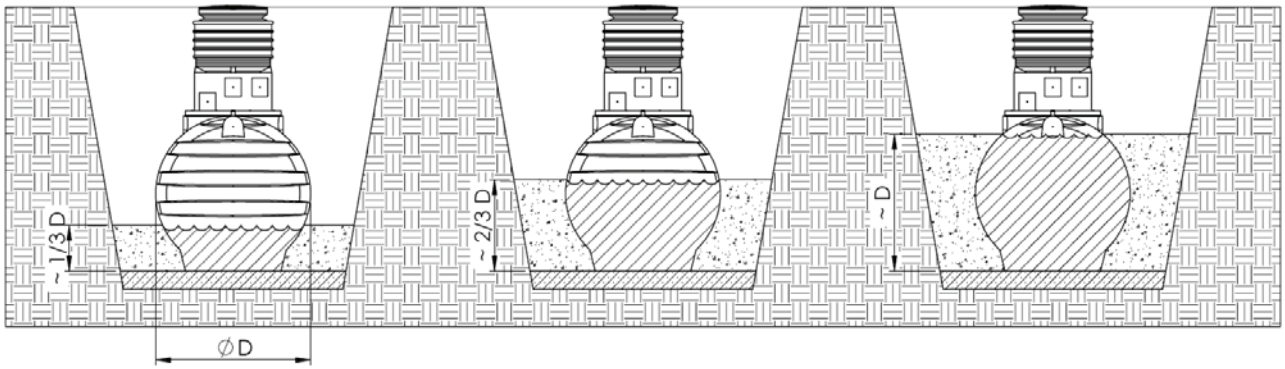

In case the thin concrete sheath around the tank is made the excavation should be backfilled within a day in order to avoid - during heavy precipitation - overloading or uplifting of the tank caused by precipitation water in the excavation. During these operations maintain the tank position, and correct if necessary.

4. Prior to continuing backfilling with soil make the following pipe connections:

a) Connection of inlet Ø110mm.
Inlet pipe must be conducted along the drop in the direction of the tank ca. 2 - 3%.

b) Connection of outlet Ø110mm to rainwater sewage system or to drainage bed e.g. a set of monoblocks.
Nominal diameter of outlet pipe cannot be less than the nominal diameter of inlet pipes. Outlet pipe must be conducted with the drop ca. 2 - 3%. In case of connection to an open rain duct it is recommended to install storm damper which protects against return of water from the duct to the tank.

c) Connection of protection pipe Ø110mm.
In order to facilitate routing of cables and suction or pressure lines insert auxiliary link/wire into the protection pipe. The protection pipe must be conducted with drop on the building side ca. 2 - 3%. If the protection pipe consists of several straight sections, they can be connected with elbows of an open angle not exceeding 30°. Note: the protection pipe is alw ays fixed above maximum level of water in the tank.
Protection pipes must provide tightness so that precipitation water does not enter the pipe.

5. Fixing of a downpipe and the tank hatch. In order to equal the height, the tank is equipped with movable telescopic hatch. The telescope consists of two elements:

a) Riser pipe permanently fixed to the tank; the pipe in its upper part has grooves on which a round gasket is placed: Ø600mm and cross-section Ø20mm.

b) Movable telescope loosely fitted on the riser pipe. Plastic or cast iron hatch is fitted on the telescope.
The degree of sliding the telescope on the riser pipe is adjusted by locating gasket in a proper pipe groove. It enables to adapt the height of the whole tank to the ground level and provides tightness between both elements. In particular cases it is also possible to cut off parts of the

telescope and the riser pipe in order to obtain the required hatch position. The telescope has three division lines for shortening

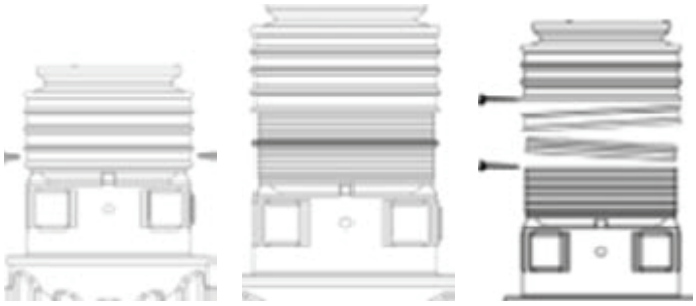

Remember that connections must be above freezing level and a ground layer above the tank body must not exceed 1.3m in case of standard installation.

After the riser pipe and the telescope have been set, make subsequent compacted gravel layers of granularity 0/4mm to the level of 15cm below the hatch edge. In case cast iron hatch is installed also a concrete load relief ring must be fixed on which the hatch shall rest.

6. Hatch fitting and backfilling to the ground level.

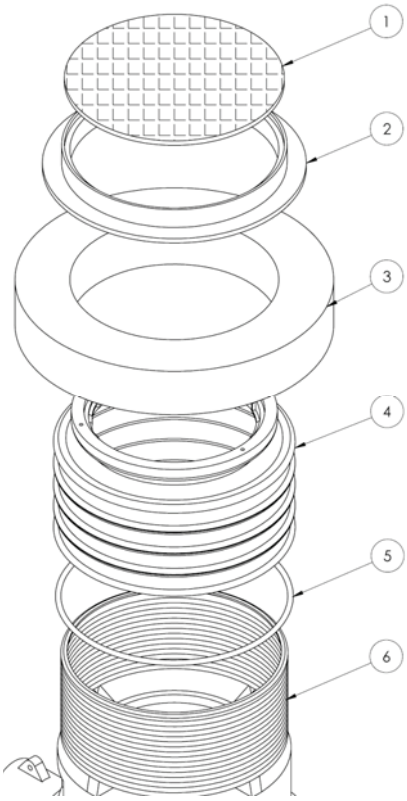

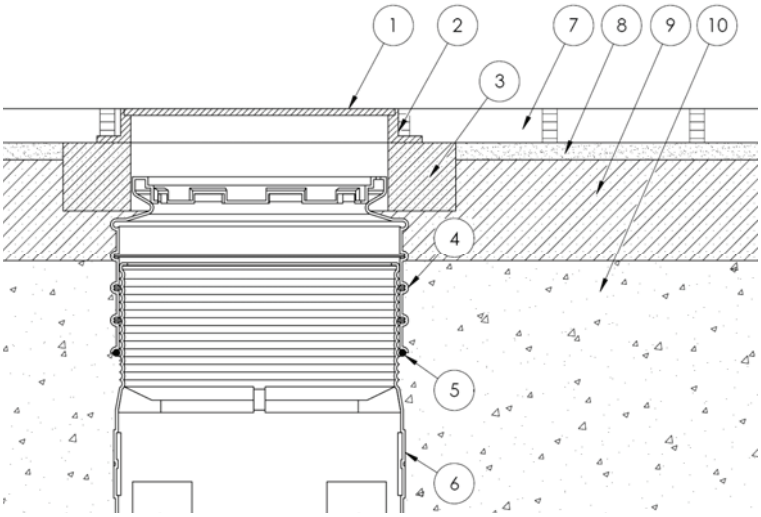

Installation of the cast iron hatch
Legend:
1 - cast iron hatch
2 - cast iron hatch ring
3 - load relief ring
4 - telescope
5 - positioning gasket
6 - riser pipe
7 - sett
8 - gravel bedding 5cm
9 - concrete load relief stub of min 0.2m thickness
10 - gravel.

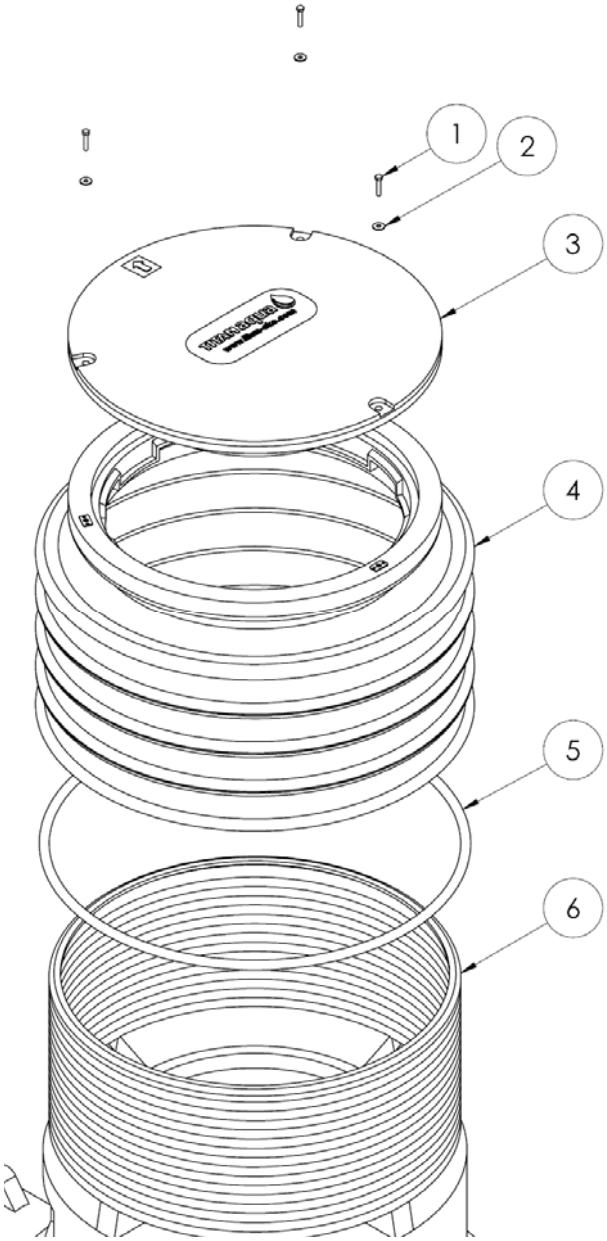

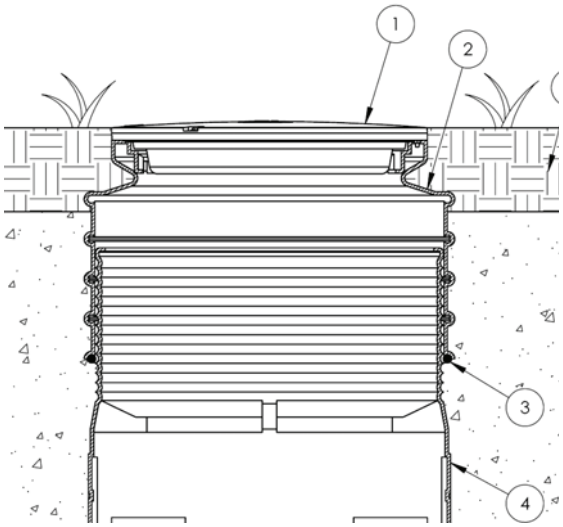

Installation of the plastic hatch:
Legend:
1 – stainless M10x50 screw
2 - stainless M10 washer
3 – plastic hatch
4 - telescope
5 – positioning gasket
6 – riser pipe
7 - sett
8 – gravel bedding 5cm
9 - concrete foundation
10 - gravel.

The last stage of installation is to mount the selected PE hatch (momentary load bearing resistance 150 kg, long-term 50 kg) or cast iron A15 or B125 hatch and to backfill the subsequent gravel layers.

In case of the cast iron hatch also install the concrete load relief ring. the last, 15 cm layer can be filled with the original ground or prepare surfaces for greater loads. e.g. of sett.

In case of the cast iron hatch, its distance from the tank body should be at least 1 meter.

5.5 GARDEN BOX ASSEMBLY

At a distance not exceeding 15m from the tank install the garden box in a location convenient for operation and not subject to damages. First step is to prepare an excavation for the box and water supply line in the ground. The excavation depth must allow for the box to be positioned with its lid at a level equal to the ground level. Make ca. 5cm layer of gravel bedding at the excavation bottom, compact and level.

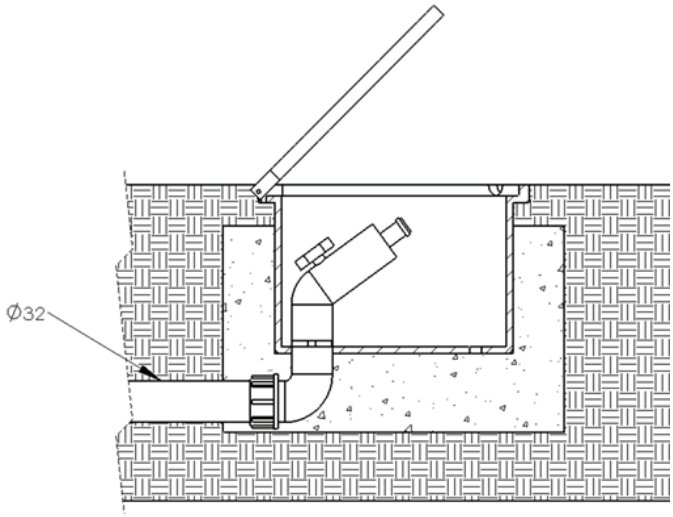

For the tank connection with the box use pressure pipes of polyethylene for distribution of water in ground and underground watering installations. Due toothier flexibility they can be easily and quickly routed in various areas.
They are characterised with high mechanical resistance, resistance to UV radiation and high smoothness of their inner walls which minimizes flow resistances. Their big advantage is the possibility of easy and quick connection with pipes by means of screwed fittings. The pipes are available in two versions:

- LDPE for water, UV stabilized, in black colour;
- HDPE for water and sewage, in blue colour.

Pipes are produced in two classes: PE80 and PE100.

- PE80 classes for pressure 0.5; 0.63; 0.8; 1.0; 1.25 MPa (PN5; PN6.3, PN8; PN10 and PN 12.5).
- PE 100 classes for pressure 0.6; 1.0 and 1.6 MPa (PN 6; PN 10 and PN 16).

The basic difference is density of raw material used for pipes production.
Disadvantage if pipes is their high radius of bending which is:

- at 20°C - 20 de;
- at 10°C - 35 de;
- at 0°C - 50 de.

Use standard clamping joints for pipes connection for diameter Ø32mm.

1. Body with inner pipe shift limiter – polypropylene
2. Nut – polypropylene
3. Clamping bushing - polyphormaldehyde,
4. O-ring gasket - rubber, NBR type

Example of a fitting with clamping joint

The basic advantage of such systems is their easy and quick assembly, multi-use and no need for specialist assembly equipment.
Cuts vertical to pipes axis should be bevelled.
Selected duct and pressure fittings should have minimum operating pressure of not less than maximum operating pressure of a pump used in a given system. It is PN5 for Garden systems and PN10 for House systems.
After the box has been positioned in the excavation and the duct has been connected, perform pressure tightness test for the whole system. If the test is positive, backfill the excavation above the pipe with 5cm layer of fine gravel and then with original ground.
Pressure duct between the tank and the box should be routed at depth not less than 30cm with 1% drop towards the tank. Try to make the connection from a single pipe section observing bending radius required by the manufacturer.

5.6 ASSEMBLY OF DRAINAGE BLOCKS

Drainage blocks should be installed at the following minimum distances:

- 30m from the nearest well being the source of drinking water,
- 5m from houses without wetness insulation,
- 2m from houses with wetness insulation,
- ½ diameter of a crown from neighbouring trees (not less than 3m),
- 2m from boundary of a plot, public road or a street pavement,
- 1.5m from gas lines and water system lines,
- 0.8m from electric cables,
- 0.5m from telecommunication cables,
- 1m from ground water level.

Drainage system should be located as far from traffic areas as possible. If it is impossible, use heavy version of blocks for loads of up to 15t.

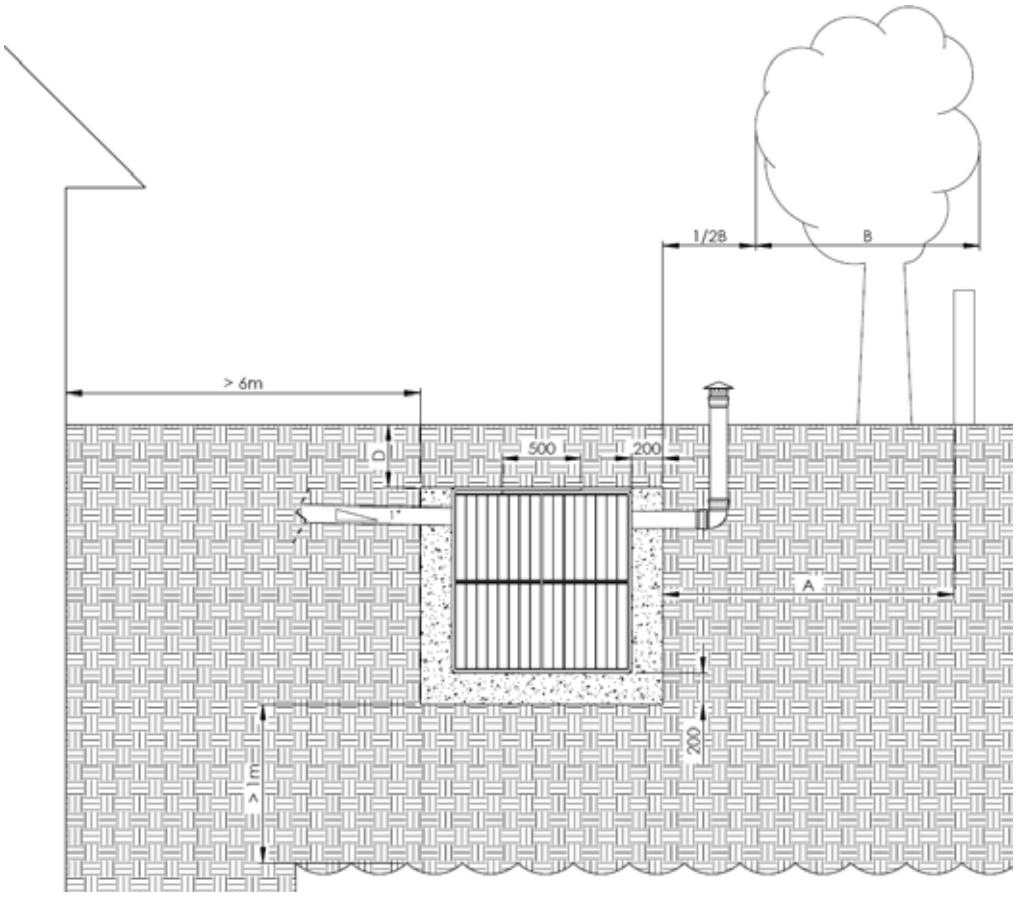

D=40cm - green areas;
D=80cm - areas with outside load (e.g. road traffic).

INSTALLATION STAGES:

1. Precisely specify the required capacity, location, shape and number of the drainage set layers.
2. Construct the excavation in accordance with the design observing all distances specified on the above scheme; protect the excavation banks, level its bottom and compact.
3. Place layer of gravel (8/16mm) of 20cm depth at the excavation bottom. In case of complex, multi-layer drainage sets you can place geo-mesh at the bottom of excavation in order to stabilize the bedding.
4. Place geo-fibre of appropriate width and length at the excavation bottom and provide total covering of AquaBloks with ca. 20-30cm overlap. If several stretches of geo-fibre are to be used, they must overlap by 50cm.
5. Locate a set of blocks without leaving any gaps between them. Adjacent edges must be connected with clips. In case of layering use vertical connecting elements – two for each two blocks.

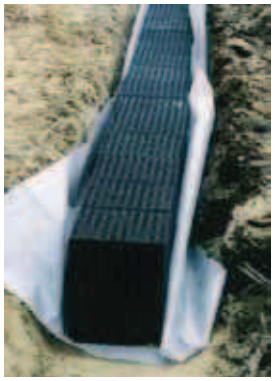

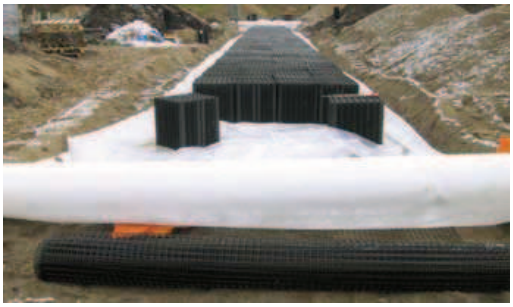

6. With a drill with a Ø110mm keyhole saw make openings for inlet pipe at the side, close to upper edge or at the top. On the opposite side of the set make similar opening for ventilation pipe.



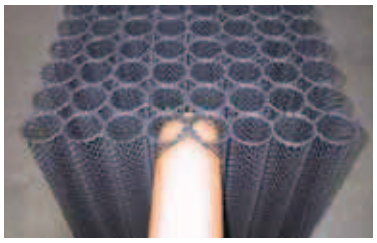

Connect inlet and ventilation pipe. Maintain 1-2% drop towards the drainage system.

7. Place geo-fibre on the set of blocks with overlap of 0.3-0.4m so that backfill material cannot enter the excavation. At pipes connections make appropriate cuts.


8. Fill with gravel spaces between the system block and the excavation edge. Subsequent layers of ca. 30cm must be levelled and compacted. Make sure not to damage the geo-fibre.

9. Place 5cm layer of gravel directly on the blocks. Fill the excavation with original ground and compact it.
   It is recommended to use backfill material in order to avoid settling. Do it with extreme care as not to damage the geo-fibre. Compacting with a roll is not recommended; compact the layers with vibrating boards or other laminar devices. Depending on the design, on the surface a loan can be sewn or the area can be prepared for pedestrian or vehicle traffic.

5.7 ASSEMBLY OF GROUND FILTERS AND RAINWATER COLLECTORS

Guidelines for assembly of individual types of rainwater collectors and ground filters are contained in separate documentation.

5.8 INSTALLATION OF PIPES

Installation of pipework should be realized prior to installation of the tank in the excavation or installation of the ground filter or drainage system. Pipes routing is specified by the required ordinates of connections for such elements with possibility of any required corrections.

STAGES OF INSTALLATION:

1. Precisely specify the route. The excavation can be dug manually or mechanically; it should be of width not less than ca.25cm. It should best be started at the building from drainage pipes connections at depth of ca. 60cm and run with 1-2% drop towards subsequent system elements in order to provide water gravitational flow.

2. Pipes can be routed only on properly prepared ground. With sand, sand and clay coils of medium compactness the pipes can be routed directly in the original ground provided it does not contain stones, debris, roots, hard particles etc. In rocky, compacted soils containing debris, stones and in soils of low load bearing capacity (turfs, silts) ground at the excavation bottom should be replaced with sand of 8/16mm granularity. Thickness of the layer should be 15-20 and it should be compacted to minimum 85%.

3. Materials.
   For installation construction use PVC Ø110mm pipes intended for sewage system installations of outdoor type of resistance adapted for assumed loads. The same type of pipes can be used for protection pipes of pressing or suction line or electric cable for submersible pump supplying in the tank or for floater switch cable of the rainwater collector. For pressing or suction installation use pressure duct for water installation of diameter 032mm. Remember it has relatively large bending radius. It forces application of smooth arches on the protection pipe constructed e.g. of several PVC elbows of an angle 300 or separation of the pressure duct into sections and their connection with clamping fittings.

4. It is recommended to route the lines at air temperature from 0^0C to $+30^0$C, to avoid further stress of installation caused by thermal expansion.

5. After initial routing of pipes in the excavation start the pipeline assembly. The assembly must be conducted in accordance with the designed drop between the hatches from the point of lower ordinate to the point of higher ordinate. Prior to pipes connection lubricate naked ends with an agent allowing for sliding.
   Push naked ends into a faucet leaving necessary space for thermal expansion. Prior to starting on another connection, each last pipe to which faucet the naked end of the following pipe is pushed, must be previously stabilized by preparing a ridge. At assembly connections provide assembly pits of 10cm depth to enable pushing the naked pipe end into the pipe faucet. Upon connection of individual PVC ducts elements take care to maintain cleanliness.

6. In case of House systems the PVC protecting pipe with pressure ducts must pass through the building wall. Culverts must provide flexibility and tightness to prevent foundation walls against wetting by ground and precipitation water. The following are two typical solutions:

   a) Directly in the opening.

   This solution is selected mainly for bricked walls which might be uneven after an opening has been made. The opening diameter must be by several centimetres bigger than that of the dust in order to provide its deformation without the risk of breaking. The pipe is wrapped with water-tight band in its middle part protecting the contact against ground water pressing. Bentonite and rubber tapes are the best – they swell under influence of water and accurately adhere to uneven surfaces. Upon fitting the pipe in the opening provide its appropriate drop and make sure it does not contact the wall in any place. Leave the space of at least 1cm and fill it tightly with not compactable mortar. It has good adherence to the ground and is flexible so allows for the pipeline tilt. After the mortar has hardened, the whole culvert is insulated against wetness. You can fit the pipe with a special cuff glued to the wall or spread a water-tight mass around the pipe and its vicinity providing contact continuous insulation. On the prepared ground you can place standard insulation of the foundation or cellar wall lutting all edges and overlaps through which water may pass with insulation mass. The advantage of culvert directly at opening is its convenience and easiness of construction. The disadvantage is that it is impractical in case of a failure. In order to replace the damaged pipe section it is required to break the wall.

   b) In culvert cushing.

   Pipe routing in the bushing is very convenient in case of a failure as the duct can be removed without breaking the wall. The bushing diameter (inside) should be at least by 2cm bigger than the pipe OD. The bushing is fitted in the opening with 2% drop or horizontally – then the pipe is pushed at a specified angle. In case of monolithic walls, the bushing is fitted in an appropriate place at boarding stage. In order to leave at least 1cm gap around the bushing it is wrapped with a cove plate which can be removed after concrete has hardened. It is important as mutual shift of the protection and the wall can cause damages. The space around the bushing, as in direct pipe routing, is filled with compactness concrete mortar. It is additionally protected on the outside with permanent flexible putty, water-tight mass or a sealing flange.

7. Pipework should be shaped in order to provide ca. 1-2% drop from drainage pipe connection subsequently to individual system elements. The duct after routing should adhere to the ground along its whole length along at least % of its circumference and the ground below the pipe must be carefully compacted. In case the ground has been emptied below the designed ordinate, its lack must be replaced with compacted sand. It is forbidden to balance the pipe drops by placing wood wedges, stones or debris beneath it – the pipe needs support along its whole length.

8. It is recommended to route the pipes and other elements such as ground filters, drainage beds, rainwater system connections prior to installation at the excavation bottom. This allows for checking ordinates of connections and possible further corrections of excavation depth.

9. After the whole system has been assembled, prior to excavations backfilling, you can initially run the whole system in order to check its tightness at pressing side (Garden system) or at suction side (House system). Perform necessary corrections.

10. Backfilling the excavation.
    The excavation backfill consists of two layers: ridge (pipe protection layer) and backfill (filling layer). Fill the excavation, to the level of 20cm above the pipes, with not compacted soil without any stones, debris, hard particles and particles larger than 20mm. You can use the original ground and if it does not meet the requirements, use sand of 8/16mm granularity. Along with ridge layering remove any excavation boarding, making sure the excavation is precisely filled and the area of the excavation previous boarding is compacted. It is forbidden to make the ridge by direct pouring ground masses onto the pipeline from trucks.
    In the areas of freezing risk protect the pipes by:
    - pre-insulated pipes or use of insulation fittings e.g. foamed polystyrene directly on pipes,
    - fitting electric heating wire directly on the pipe,

- use keramsite or gravel for pipe ridge layer.

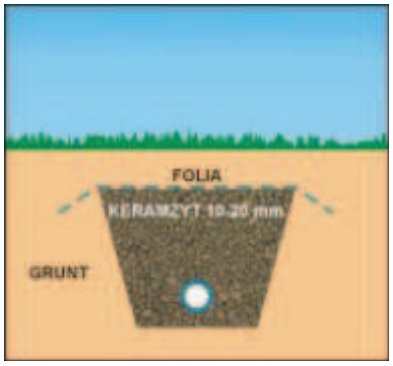

Pipeline keramsite thermal insulation

5.9 ELECTRIC SYSTEM

Electric system must be made with extreme care in accordance with all regulations in force and by qualified persons.

1. In case of Garden systems route the pump supply cable to the building, and in case of House systems route the floater switch cable to Matrix collector. Use YKY ground cables of cross-section of at least 1.5mm^2. The cables should be routed in PVC Ø110mm protection pipe together with PE Ø32mm pressing pipe.

2. Electric supply cables for the pump or floater switch must not be extended if the connection is to be located in the ground. In case it is necessary, replace the whole cable for a longer one or if it is impossible make the connection with special muff fitting so it provides appropriate durability and tightness.

3. The cable should be routed at the following depths:
   a) 0.5m for lines routed below a pavement,
   b) 0.7m for lines in the area without a pavement,
   c) 1m for lines below vehicle road.
   The cables must be router at a distance of at least 1m from the road and at least 2m from tree trunks.

4. Cable routing should be done in a manner excluding their damage or damage to the other cables existing along the constructed line. Ambient temperature during cable routing should not drop below 0°C.

5. Place 10cm compacted layer on not compatcted soil and 15cm layer of original soil under the protection pipe; cover it with a warning film in blue colour.

6. Protection PVC pipe should be tight in order to prevent access of ground or rain water or rodents.

7. Whole pipework must be constructed with 0.1% drop to provide discharge of water from any condensation.

8. Install a current differential switch on the pump or collector power supply line with activation current not more than 30mA.

VI. SYSTEM START-UP AND OPERATION

Prior to the first start-up of a new system check the following points:

1. Accordance of construction with the system design.
2. Lack of mechanical damages and assembly correctness.
3. The tank is filled with water to its overflow level.
4. Correct electric installation.

In Garden systems prime the pump, connect the pump Power supply and open the valve in the garden box. After a while you can start watering.
In House systems proceed in accordance with guidelines of operations instruction for Matrix collector.

VII. TROUBLESHOOTING

Problem	Possible cause	Remedy
Pump does not supply liquid. Motor does not rotate.	1. Lack of electric energy. 2. Plug inserted incorrectly. 3. Activation of current differential switch. 4. Damaged condenser. 5. Dry pump operations; alarm. 6. Possible leak from hydraulic installation, motor overheats resulting In motor protection activation.	1-2. Check the voltage and insert the plug correctly. 3. Restore current differential switch. In case it activates again, contact the qualified electrician. 4. Condenser replacement by qualified personnel. 5. Restore water level inside pump body, check level of suction liquid and reset by voltage input. 6. Wait until the pump cools down and supply voltage.
Pump does not supply liquid. Motor rotates.	1. Blocked suction filter. 2. Air inside the pump or in the suction line. 3. Pump incorrectly primed. 4. Worn or blocked rotor.	1. Clean the filter. 2. Repeat pump start-up several times by cutting off and switching power supply to eliminate the air completely. 3. Restore water level inside pump body, check level of suction liquid. 4. Replace the rotor or remove obstacles.
Pump supplies liquid at limited flow intensity.	1. Partially blocked suction filter. 2. Partially blocked pressing line. 3. Partial air suction.	1. Clean the filter. 2. Unblock the line. 3. Check fittings tightness on hydraulic ducts.
Pump does not stop after intake is closed.	1. Dirty filter. 2. Leak at hydraulic installation duct.	1. Clean the filter. 2. Remove the leak.
Pump does not activate after water system is opened.	1. Pump alarm caused by motor protection activation. 2. Pump alarm caused by dry operation protection. 3. Water column higher than 12 meters (water system facet located above).	1. Wait until the pump cools down and supply voltage. 2. Restore water level inside pump body, check level of suction liquid and reset by voltage input. 3. Set the pump so that water column is less than 12 meters.
Flow level too low.	1. Suction basket partially blocked. 2. Rotor or inlet pipe are partially blocked or covered with sediment. 3. Incorrect power supply voltage. 4. Leak at suction or pressing line.	1. Clean mesh filter. 2. Dismount the pump, clean the rotor and if necessary suction line. 4. Check power supply voltage and if necessary correct the installation. 5. Remove the leak.
Pump stops (possible activation of thermal overload protection system).	1. Pumped liquid is too contaminated and causes motor overheating. 2. Water temperature too high. 3. Pump rotor or ducts blocked by an object. 4. Electric power supply is not compliant with rating plate parameters.	1. Check the tank water cleanliness. Remove possible cause of water contamination. 2. Do not operate the system until temperature drops. 3. Clean the pump and ducts. 4. Check and correct power supply voltage.
During rain tank water level increases above the overflow siphon.	1. Faulty designed or constructed system. 2. Blocked duct. 3. Water returns from rainwater sewage system.	1. Re-design the system or check its construction and possible corrections. 2. Unblock the ducts. 3. Install storm gate between the tank overflow and rainwater sewage system collecting pipe.

If despite performing the aforementioned operations the problem is not solved, contact with the system manufacturer or the installator.

VIII. MAINTENANCE

Complete installation should be maintained at least every 6 months.
During maintenance you should:

1. Check and clean mesh filters at the end of suction line and at the inlet.
2. Check tightness of the tank and the whole system.
3. Check devices and electric installation (pump efficiency, condition of cables etc.)
4. Condition of hatches and protections.

Additionally, every 5 years:

remove permanent impurities (silt, sediment) from the tank (and ground filter if necessary). Use tool which do not damage the tank walls and its equipment. Inner surface of the tank and devices clean with water removing remaining sediment.

NOTE!
The tank can be entered only in strict observance with current labour safety and health regulations and only with the assistance of another person. Non observance of the regulations can cause a life risk!

IX. UTILIZATION

After a lifetime the tanks must be disposed of in accordance with European Directive 2002/96/EC.

- disassemble all system elements, pour over the excavations, plug in connections for e.g. rainwater sewage system,
- elements must be cleaned, dismantled, separated into individual parts: metal, plastic, rubber, electronic sub-assemblies.

Each of the materials should be recycled or disposed of in accordance with current regulations. Recycling shouldbe commissioned to an expert company.

X. WARRANTY TERMS

1. The manufacturer grants the following warranty:
   - 5 years for the tank.
   - 2 years for the equipment.
2. The condition for the warranty to be valid is the system transportation, installation and operation in accordance with the manufacturer's guidelines, whilst:
   - The manufacturer's representative has the right, in its sole discretion, to participate in assembly and installation of the system. The purchaser agrees to inform the manufacturer's representative at least 30 days in advance before commencement of the assembly. If the aforementioned condition is violated by the purchaser, the warranty is deemed invalid.
   - The manufacturer's representative may, in limited scope, provide training before and during assembly. Arrangement of such training shall not influence the hereby warranty terms.
   - Presence of the manufacturer's representative at the assembly location does not increase the warranty liability of the manufacturer. It does not influence the rights and obligations of the manufacturer and the purchaser (investor).
   - The purchaser is responsible for installation and start-up of the system in accordance with the accepted design, specifications of the manufacturer and all applicable regulations.
   - On no account are the manufacturer and its representative liable for any claims resulting from incorrect design, transportation or assembly of the system.
3. The hereby warranty does not include:
   - accidental damages,
   - damages resulting from regular system wear,
   - damages resulting from incorrect system operation (misuse, neglect, overloading the system, placing improper materials in the system).
4. The warranty expires in case of damages or defects caused by non observance of the operation manual. Carefully read all guidelines of the manual for the device operation and separate pump, collector and electronic equipment manuals.
5. The purchaser, upon commissioning service work, agrees to issue an invoice for such service which is not included in the warranty directly by authorized service of the manufacturer. Kingspan Environmental verifies all sent reports, supports the service purchaser and authorised service to realize the order as efficiently as possible, however it is not a party in any settlements between the purchaser and service contractor.
6. The warranty does not include standard maintenance service such as: cleaning of filters, desludging of tank, system desecration, sealing etc.
7. Purchaser forfeits waranty rights in following cases:
   - damages due to improper transportation, storage or random events,
   - failure to ensure maintenance, mechanic damages, acts of vandalism,
   - defects due to unauthorized repairs or modifications by service not authorized by the manufacturer,
   - using unoriginal parts or subassemblies for service works,
   - changing product purpose,
   - if damages or premature wear result from incorrect operation of the machine.
8. When reporting failure the first step is to send a copy of attached form filled in writing (e.g. by fax), to Kinsgpan Environmental Sp. z o.o.
9. Defects revealed within warranty period shall be remedied within two weeks following the date of report in writing. Guaranteed response time to notification is 48 hours on business days. Defect reports are received 24/7. Report acceptance time for reports sent on 4 p.m. to 8 a.m., and on holidays and weekends, is 8 a.m. the following business day.
10. If the defect during warranty period is found to result from incorrect use, supervision or installation of the product or if damage took place after warranty expiry the person reporting shall be charged with service costs.